BRIDGE DECK OVERLAY
BRFN-926-0(9)--39-94

LETTING DATE
04-15-2008

WEBSTER COUNTY

LEGEND

INTERSTATE ROUTE	29
FREEWAY OR EXPRESSWAY ROUTE	69
U.S. NUMBERED ROUTE	6
STATE NUMBERED ROUTE	44
COUNTY NUMBERED ROUTE	A13
LOCAL ROAD OR CITY STREET	
RAILROAD	
CORPORATION LINE	
SECTION LINE	
CUL DE SAC	
SECTION, TOWNSHIP & RANGE NUMBERS	9 , T-81N , R-30W

Iowa Department of Transportation
Highway Division

PLANS OF PROPOSED IMPROVEMENTS ON THE

PRIMARY ROAD SYSTEM
WEBSTER COUNTY

BRIDGE DECK OVERLAY

ON IA 926 OVER DES MOINES RIVER & CHICAGO CENTRAL RAILROAD IN CITY OF FORT DODGE

THE IOWA DEPARTMENT OF TRANSPORTATION STANDARD SPECIFICATIONS FOR HIGHWAY AND BRIDGE CONSTRUCTION, SERIES 2001, PLUS APPLICABLE GENERAL SUPPLEMENTAL SPECIFICATIONS, DEVELOPMENTAL SPECIFICATIONS, SUPPLEMENTAL SPECIFICATIONS AND SPECIAL PROVISIONS SHALL APPLY TO CONSTRUCTION WORK ON THIS PROJECT.

VALUE ENGINEERING SAVES. REFER TO THE GENERAL NOTES IN THESE PLANS.

DESIGN NO. 108

~~DESIGN NO. 208~~

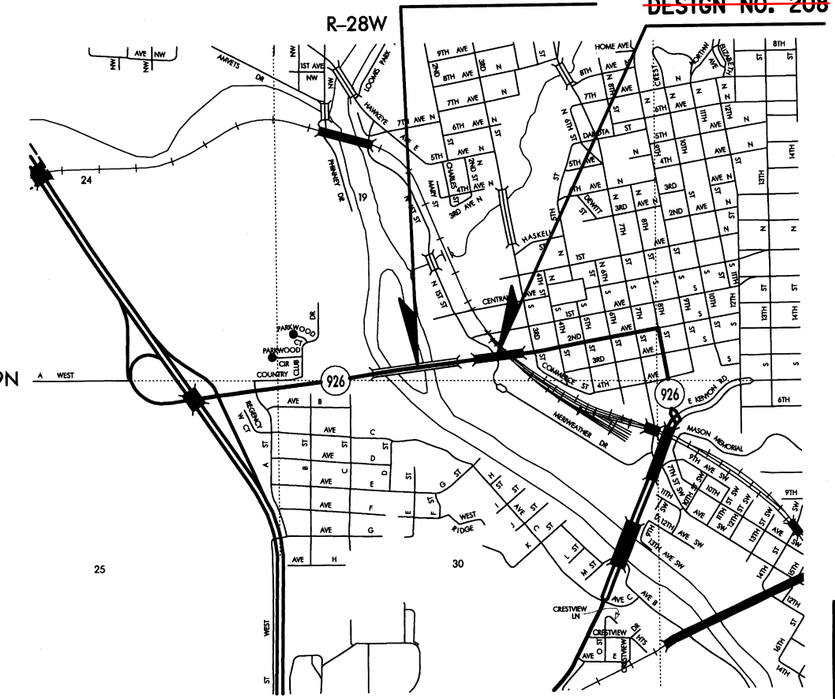

LOCATION MAP
PART OF CITY OF FORT DODGE

PROJECT DIRECTORY NAME: 9492602005

ALL WORKING DRAWINGS INCLUDING SHOP DRAWINGS AND FALSEWORK DRAWINGS WILL BE CHECKED BY:
WHKS & CO.
1421 S. BELL AVE., SUITE 103
AMES, IOWA 50010-7710

ENGLISH STANDARD BRIDGE PLANS

STANDARD	ISSUED	REVISED

REVISIONS

TOTAL SHEETS	50
PROJECT NUMBER	BRFN-926-0(9)--39-94
R.O.W. PROJECT NUMBER	
PROJECT IDENTIFICATION NUMBER	05-94-926-020

INDEX OF SHEETS

NO.	DESCRIPTION
1	TITLE SHEET
2	BRIDGE ESTIMATE SHEET - DES. 108
2-20	BRIDGE DESIGN 108
21	ROADWAY ESTIMATE SHEET - DES. 108
21-27	ROADWAY SHEETS - DES. 108
28	BRIDGE ESTIMATE SHEET - DES. 208
28-42	BRIDGE DESIGN 208
43	ROADWAY ESTIMATE SHEET - DES. 208
43-50	ROADWAY SHEETS - DES. 208

STANDARD ROAD PLANS

STANDARD ROAD PLANS ARE LISTED ON SHEETS 22, 44

DESIGN DATA URBAN

2006 AADT 7000 V.P.D.

Form 520003 12-97

LICENSED PROFESSIONAL ENGINEER TIMOTHY L. EHRICH 18530 IOWA

I hereby certify that this project was constructed in accordance with the contract documents, the "as-built" plans were prepared under my supervision, and that I am a duly licensed Professional Engineer under the laws of the State of Iowa.

T. Ehrich — Project Engineer — 4/11/17 Date

My license renewal date is December 31, 2013

Year	Contractor	Project Inspector
2008		
2010	Christensen Brothers Inc.	Alan Lightfoot

THIS AS BUILT PLAN INCLUDES

YEAR	WORK	CONTRACTOR	PROJ. INSPECTOR
2009	6" RAIL - PED RAIL	WEST CENTRAL CONSTR.	Lightfoot
2009	CONC. BARRIER RAIL	UNITED CONTRACTORS, INC	Lightfoot
2009	PAINTED PAVT MARK	ROADSAFE TRAFFIC SYS	Lightfoot
2009	BRIDGE CLEAN + PAINT	P.L. SERVICES	Lightfoot
2009	RMVL of OVERLAY	DUSTROL, INC.	Lightfoot
2009	LONG. GROOVING	CEDAR FALLS CONSTR. CO	Lightfoot
2009	RMV + REINSTALL LUM.	KWS. INC.	Lightfoot
2009	CFRP WRAP (PIER)	VECTOR	Lightfoot

INDEX OF SEALS

SHEET NO.	NAME	TYPE
1	SURENDRA K. GUPTA	STRUCTURAL DESIGN
21	BRIAN J. BIRKLAND	ROAD DESIGN

STRUCTURAL DESIGN

LICENSED PROFESSIONAL ENGINEER Surendra K. Gupta 7329 IOWA

I hereby certify that this engineering document was prepared by me or under my direct personal supervision and that I am a duly licensed Professional Engineer under the laws of the State of Iowa.

Suren K. Gupta — Signature — 02-01-2008 Date

Surendra K. Gupta, P.E.
Printed or Typed Name

My license renewal date is December 31, 2009

Pages or sheets covered by this seal: SHEETS 1 THRU 20 OF 50
SHEETS 28 THRU 42 OF 50

WEBSTER COUNTY - DESIGN NO. 108 & 208

DESIGN TEAM WHKS & Co.	ENGLISH	IOWA DOT * OFFICE OF BRIDGES AND STRUCTURES	FILE NO. 30163	WEBSTER COUNTY	PROJECT NUMBER BRFN-926-0(9)--39-94	SHEET NUMBER 1

L:\dept\6\6400.21\Webster 108\drawings\FINAL\Extrusion Submittal\94926009.brg

GENERAL NOTES:

THIS DESIGN IS FOR REPAIRS TO THE EXISTING MULTISPAN CONTINUOUS WELDED PLATE GIRDER BRIDGE PLUS 90'-0 x 58'-0 CONTINUOUS CONCRETE SLAB BRIDGE ON IA. 926 OVER THE DES MOINES RIVER AND BIKE/RECREATION TRAIL IN THE CITY OF FORT DODGE. THIS BRIDGE HAS PREVIOUSLY BEEN OVERLAID. COPIES OF ORIGINAL DESIGN PLANS AND REPAIR AND OVERLAY PLANS WILL BE MADE AVAILABLE TO THE CONTRACTOR. CONTACT THE OFFICE OF CONTRACTS - HIGHWAY DIVISION - IOWA D.O.T. - AMES.

REPAIR SHALL CONSIST OF:

1. REMOVAL OF EXISTING BRIDGE FLOOR OVERLAY
2. BRIDGE FLOOR OVERLAY
3. BRIDGE FLOOR REPAIR, CLASS A
4. REMOVAL OF EXISTING STEEL HANDRAIL ON BOTH CURBS AND INSTALLING STRUCTURAL STEEL PEDESTRIAN HANDRAILING ON SOUTH CURB
5. WIDEN EXISTING S. CURB 1'-0 AT GUTTER LINE OF SLAB AND GIRDER BRIDGES
6. INSTALLING RETROFIT BARRIER RAIL ON BOTH CURBS
7. RECONSTRUCTING THE TOP OF EAST ABUTMENT BACKWALL OF GIRDER BRIDGE
8. REPAIRING SPALLED CONCRETE ON NORTH CURB FACE AND MEDIAN CURBS AND REPAIRING SPALLED CONCRETE AT PIERS
9. ZONE PAINTING OF STRUCTURAL STEEL AT BOTH ABUTMENTS AND PIER 4 OF GIRDER BRIDGE
10. REPLACING APPROACH PAVEMENT AT BOTH BRIDGE ENDS
11. INSTALLING NEW GUARDRAIL
12. REMOVING AND REPLACING 275 FEET OF MEDIAN PAVEMENT FOR CROSSOVER TRAFFIC CONTROL
13. REPAIRING RA-41 INTAKE IN SOUTHEAST QUADRANT

PRESENT FLOOR THICKNESS IS ABOUT 1'-4⅞ INCHES ON THE SLAB SPANS AND 8½ INCHES ON THE GIRDER SPANS, INCLUDING EXISTING OVERLAY. THE CONTRACTOR SHALL EXERCISE CARE IN REMOVING CONCRETE IN ORDER TO PREVENT UNNECESSARY UNBONDING OF REINFORCING STEEL.

FOR THE SLAB SPANS, THE CONTRACTOR SHALL EXERCISE CARE IN ORDER TO PREVENT UNNECESSARY REMOVAL OF CONCRETE BELOW THE TOP OF THE TOP REINFORCING. THE ENERGY OF HAND TOOLS SHALL BE RESTRICTED NEAR THE BOTTOM OF THE DESIGNATED CLASS A REPAIR AREAS IN ORDER TO PREVENT UNBONDING OF REINFORCING. NO CONCRETE SHALL BE REMOVED BELOW THE TOP OF THE TOP LONGITUDINAL REINFORCING WITHOUT PRIOR PERMISSION FROM THE BRIDGE ENGINEER.

ALL DIMENSIONS AND DETAILS SHOWN ON THESE PLANS PERTINENT TO NEW CONSTRUCTION SHALL BE VERIFIED IN THE FIELD BY THE CONTRACTOR BEFORE STARTING CONSTRUCTION.

THE LUMP SUM BID FOR "REMOVALS, AS PER PLAN" SHALL INCLUDE ALL COSTS ASSOCIATED WITH REMOVING THE FACE OF EXISTING SOUTH CURB, PORTION OF CURB NEAR SCUPPER DRAINS, PORTIONS OF THE EXISTING EXPANSION DEVICE AND THE TOP OF EAST ABUTMENT BACKWALL. REMOVAL OF SCHEDULED ITEMS SHALL BE IN ACCORDANCE WITH SECTION 2401 OF THE SPECIFICATIONS. ANY DAMAGE TO ANY STEEL OR CONCRETE NOT TO BE REMOVED SHALL BE THE RESPONSIBILITY OF THE CONTRACTOR AND REPAIRED AT NO EXTRA COST TO THE STATE.

AREAS OF CURB INDICATED ON THE "SITUATION PLAN" OR DESIGNATED BY THE ENGINEER ARE TO BE REPAIRED USING CONCRETE REPAIR NOTES AND DETAILS INCLUDED IN THESE PLANS.

THE PRICE BID FOR "REMOVAL OF EXISTING HANDRAIL" SHALL INCLUDE ALL COSTS ASSOCIATED WITH DISMANTLING THE EXISTING STEEL HANDRAIL (APPROX. 2415 L.F. AND 288 POSTS). THE RAILS AND POSTS ARE TO BECOME THE PROPERTY OF THE CONTRACTOR AND REMOVED FROM THE SITE BY THE CONTRACTOR. THE BID ITEM SHALL ALSO INCLUDE ALL COSTS ASSOCIATED WITH CUTTING OFF AND PAINTING OF THE EXISTING RAIL POST ANCHOR BOLTS IF REQUIRED.

THE TOP OF THE EAST ABUTMENT BACKWALL AS SHOWN SHALL BE CONSTRUCTED USING STRUCTURAL CONCRETE CLASS D. IF MACHINE FINISHING FOR THE TOP OF THE BACKWALL IS NOT PRACTICAL, A MANUAL TYPE SCREED OR METAL PLATE WITH APPROVED VIBRATORS ATTACHED SHALL BE USED.

IT WILL BE NECESSARY TO SUPPORT THE EARTH AND/OR GRANULAR MATERIAL BEHIND THE ABUTMENT DURING RECONSTRUCTION OF THE TOP OF EAST ABUTMENT BACKWALL BY SOME METHOD APPROVED BY THE ENGINEER. ALL COSTS FOR SUPPORTING THE EARTH AND/OR GRANULAR MATERIAL SHALL BE INCLUDED IN THE PRICE BID FOR "CLASS 20 EXCAVATION".

IN ADDITION TO THE REQUIREMENTS OF ARTICLE 2413.09, BOTH ABUTMENT BRIDGE SEATS (GIRDER) AND PIER 4 EAST BRIDGE SEAT (GIRDER) SHALL HAVE AN APPLICATION OF CONCRETE SEALER IN ACCORDANCE WITH SUB-ARTICLE 2403.21 (D).

UTILITY COMPANIES WHOSE FACILITIES ARE SHOWN ON THE PLANS OR KNOWN TO BE WITHIN THE CONSTRUCTION LIMITS SHALL BE NOTIFIED BY THE BRIDGE CONTRACTOR OF THE STARTING DATE.

THE BRIDGE FLOOR IS COVERED WITH A 1¾ INCH THICK PORTLAND CEMENT CONCRETE OVERLAY. THE CONTRACTOR SHALL NOTE THE REDEFINING OF THE CLASSIFICATION LINE (BOUNDARY BETWEEN REPAIR AND OVERLAY) FOR THIS PROJECT DUE TO THE EXISTING 1¾ INCH OVERLAY. THE CLASSIFICATION LINE WILL BE DEFINED AS 2 INCHES BELOW THE TOP OF EXISTING OVERLAY. THIS WILL NECESSITATE THE REMOVAL OF THE EXISTING BRIDGE FLOOR OVERLAY BEFORE PLACING THE PROPOSED NEW BRIDGE FLOOR OVERLAY.

ALL COSTS ASSOCIATED WITH THE REMOVAL OF THE EXISTING OVERLAY SHALL BE INCLUDED IN THE BID ITEM "REMOVAL OF EXISTING P.C.C. OVERLAY". REMOVAL OF EXISTING OVERLAY SHALL BE COMPUTED IN SQUARE YARDS FROM THE MEASUREMENT OF AREAS REMOVED. THE CONTRACTOR WILL BE PAID THE CONTRACT PRICE PER SQUARE YARD FOR FURNISHING ALL EQUIPMENT AND LABOR NECESSARY TO REMOVE THE CONCRETE TO WITHIN ¼ INCH ABOVE THE CLASSIFICATION LINE. ALL COSTS, INCLUDING FURNISHING EQUIPMENT AND LABOR, ASSOCIATED WITH REMOVAL OF THE NEXT ¼ INCH OF CONCRETE (TO THE CLASSIFICATION LINE) SHALL BE INCLUDED IN THE BID ITEM "BRIDGE FLOOR OVERLAY".

UPON COMPLETION OF THE REMOVAL OF CONCRETE DOWN TO THE CLASSIFICATION LINE, THE ENGINEER SHALL DETERMINE THE AREAS OF BRIDGE DECK TO BE REPAIRED AS "CLASS A BRIDGE FLOOR REPAIR". ACTUAL HOLLOW AREAS, AS DETERMINED BY THE ENGINEER, SHALL BE REPAIRED.

NO PRELIMINARY FLOOR SURVEY IS SHOWN. THE PLAN QUANTITY FOR "CLASS A BRIDGE FLOOR REPAIR" IS ESTIMATED AS 25% OF THE TOTAL FLOOR AREA. THE ACTUAL QUANTITY IS DETERMINED BY THE ENGINEER AFTER THE EXISTING OVERLAY HAS BEEN REMOVED. ACTUAL SPALLED AND HOLLOW AREAS AS DETERMINED BY THE ENGINEER SHALL BE REPAIRED.

BEFORE PROCEEDING WITH BRIDGE FLOOR OVERLAY AND BRIDGE FLOOR REPAIR THE CONTRACTOR MAY COMPLETE ALL STAGES OF OTHER CONSTRUCTION. ANY CONSTRUCTION SHALL HAVE STAGE LIMITS, TEMPORARY BARRIER RAIL AND TRAFFIC CONTROL AS DETAILED ON THESE PLANS. TEMPORARY BARRIER RAIL AND TRAFFIC CONTROL MAY BE ADJUSTED TO FIT THE ACTUAL WORK AND STORAGE AREA. WHEN BACKWALLS AND/OR APPROACH SECTIONS ARE TO BE REBUILT TO A RAISED SURFACE, AND WHEN FLOOR OVERLAY IS NOT A PART OF THE SAME STAGE, THE CONTRACTOR SHALL PROVIDE FOR PROFILE TRANSITION WITH H.M.A. SURFACING. PROFILE TRANSITION SHALL BE TAPERED AT A RATE OF 25' FOR 1½ INCHES OF RAISE. THE H.M.A. TRANSITION MATERIAL SHALL BE A COMMERCIAL GRADE HOT SURFACING MIX OR A MIX APPROVED BY THE ENGINEER H.M.A. MAY BE PLACED BY HAND METHODS AND MAY BE COMPACTED BY ANY APPROVED METHOD. ALL COSTS FOR ADDITIONAL TRAFFIC CONTROL, REPOSITIONING OF BARRIER AND H.M.A. SURFACING SHALL BE BORNE BY THE CONTRACTOR.

THE BID ITEM "STRUCTURAL STEEL" SHALL ALSO INCLUDE ALL COSTS ASSOCIATED WITH CUTTING RAISE PLATES AND WELDING NEW CURB PLATES ON THE EXPANSION DEVICE AS SHOWN EXCEPT INCLUDED IN THE BID ITEM "PAINTING STRUCTURAL STEEL" AND THE BID ITEM "CONTAINMENT".

THE LUMP SUM BID FOR "BRIDGE CLEANING FOR PAINTING" SHALL INCLUDE THE COSTS OF REMOVAL OF ACCUMULATED FOREIGN MATERIAL, LOOSE PAINT AND WATER WASHING AS DESCRIBED IN THE STANDARD SPECIFICATIONS 2508.

THE LUMP SUM BID FOR "BLAST CLEANING OF STRUCTURAL STEEL" SHALL INCLUDE ALL COSTS FOR THE PREPARATION OF STEEL SURFACES THAT REQUIRE PAINTING AS DESCRIBED IN THE STANDARD SPECIFICATIONS 2508.

THE LUMP SUM BID FOR "PAINTING OF STRUCTURAL STEEL" SHALL INCLUDE ALL COSTS FOR PAINTING THE STRUCTURAL STEEL WITHIN THE LIMIT AS SHOWN ON DESIGN SHEET 2 (INCLUDES ALL BEAMS, DIAPHRAGMS AND BEARINGS - APPROX. 4500 SQ. FT.) AS DESCRIBED IN THE STANDARD SPECIFICATIONS 2508. AN EPOXY PAINT SYSTEM SHALL BE USED. BEFORE CLEANING THE EXISTING STRUCTURAL STEEL, THE BRIDGE CONTRACTOR SHALL REMOVE ANY ATTACHMENTS NOT BEING REUSED. IN ADDITION, ANY EXISTING STEEL INACCESSABLE AFTER REASSEMBLY WILL BE GIVEN THE FULL PAINT SYSTEM BEFORE FINAL ASSEMBLY OF THE STRUCTURE.

CONTAINMENT AND DISPOSAL OF WASTE SHALL BE IN ACCORDANCE WITH STANDARD SPECIFICATIONS 2508. ALL COSTS ASSOCIATED WITH HAULING AND DEPOSITING OF WASTE AT THE DESIGNATED SITE/FACILITY SHALL BE THE RESPONSIBILITY OF THE CONTRACTOR AND INCLUDED IN THE CONTRACT PRICE BID FOR THE "CONTAINMENT" ITEM.

A SCRAPE SAMPLE WAS TAKEN FROM AN AREA OF THIS BRIDGE TO GET AN INDICATION OF THE EXISTENCE OF AND LEVEL OF TOTAL CHROMIUM AND TOTAL LEAD. ANALYSIS OF TOTAL LEAD ON THIS SAMPLE WAS 187,000 PARTS PER MILLION (PPM). ANALYSIS OF TOTAL CHROMIUM ON THIS SAMPLE WAS 38,300 PPM. THESE ANALYSES SHOW THE EXISTENCE OF THESE TWO TOXIC CONSTITUENTS. LEVELS INDICATED BY THESE TESTS COULD CREATE CONDITIONS ABOVE REGULATORY LIMITS FOR HEALTH AND SAFETY REQUIREMENTS. NO OTHER CONSTITUENTS WERE ANALYZED. THE BIDDER SHOULD NOT RELY ON THE DEPARTMENT'S TESTING AND ANALYSIS FOR ANY PURPOSE OTHER THAN AS AN INDICATION OF THE EXISTENCE OF THESE TWO TOXIC CONSTITUENTS.

SPECIFICATIONS:

CONSTRUCTION: IOWA DEPARTMENT OF TRANSPORTATION STANDARD SPECIFICATIONS FOR HIGHWAY AND BRIDGE CONSTRUCTION, SERIES 2001, PLUS APPLICABLE GENERAL SUPPLEMENTAL SPECIFICATIONS, DEVELOPMENTAL SPECIFICATIONS, SUPPLEMENTAL SPECIFICATIONS AND SPECIAL PROVISIONS SHALL APPLY TO CONSTRUCTION WORK ON THIS PROJECT, INCLUDING SUPPLEMENTAL SPECIFICATION "CLEANING, SURFACE PREPARATION AND PAINTING OF GALVANIZED SURFACES".

DESIGN STRESSES:

DESIGN STRESSES FOR THE FOLLOWING MATERIALS ARE IN ACCORDANCE WITH THE AASHTO STANDARD SPECIFICATIONS FOR HIGHWAY BRIDGES, SERIES OF 2002.

CONCRETE IN ACCORDANCE WITH SECTION 8, f'c = 3,500 PSI.
REINFORCING STEEL IN ACCORDANCE WITH SECTION 8, GRADE 60.
STRUCTURAL STEEL IN ACCORDANCE WITH SECTION 10, ASTM A709, GRADE 36

SEE DESIGN SHEET 2 FOR ADDITIONAL NOTES.

ESTIMATED BRIDGE QUANTITIES

ITEM NO.	ITEM CODE	ITEM	UNITS	QUANTITY	AS BUILT QUANTITY
1	2401-6745635	REMOVAL OF EXISTING HANDRAIL	LS	1.000	1.000
2	2401-6750001	REMOVALS, AS PER PLAN	LS	1.000	1.000
3	2402-2720000	EXCAVATION, CLASS 20	CY	16.000	16.000
4	2403-0100000	STRUCTURAL CONCRETE (MISCELLANEOUS)	CY	87.900	87.900
5	2404-7775005	REINFORCING STEEL, EPOXY COATED	LB	8602.000	8602.000
6	2408-7800000	STRUCTURAL STEEL	LB	309.000	309.000
7	2413-0698072	BRIDGE FLOOR REPAIR, CLASS A	SY	~~1775.000~~	2127.440
8	2413-1200000	STEEL EXTRUSION JOINT WITH NEOPRENE	LF	56.000	56.000
9	2413-1200100	NEOPRENE GLAND INSTALLATION AND TESTING	LF	56.000	56.000
10	2414-6431100	RETROFIT CONCRETE BARRIER RAILING	LF	2426.100	2426.100
11	2414-6445100	STRUCTURAL STEEL PEDESTRIAN HANDRAIL	LF	1187.500	1187.500
12	2426-6772016	CONCRETE REPAIR	SF	~~871.000~~	999.460
13	2508-0804000	BRIDGE CLEANING FOR PAINTING	LS	1.000	1.000
14	2508-0805000	BLAST CLEANING OF STRUCTURAL STEEL	LS	1.000	1.000
15	2508-0970000	CONTAINMENT	LS	1.000	1.000
16	2508-0991000	PAINTING OF STRUCTURAL STEEL	LS	1.000	1.000
17	2510-6745640	REMOVAL OF EXISTING P.C. OVERLAY	SY	7233.000	7233.000
18	2533-4980005	MOBILIZATION	LS	1.000	1.000
		ALTERNATE A			
19A	2413-0698068	BRIDGE FLOOR OVERLAY (CLASS O PCC)	SY	7099.000	7099.000
		ALTERNATE B			
19B	2413-0698069	BRIDGE FLOOR OVERLAY (CLASS HPC-O PCC)	SY	7099.000	0

ESTIMATE REFERENCE INFORMATION

DATA LISTED BELOW IS FOR INFORMATIONAL PURPOSES ONLY AND SHALL NOT CONSTITUTE A BASIS FOR ANY EXTRA WORK ORDERS.

ITEM NO.	DESCRIPTION
3	INCLUDES COST OF PLACING GRANULAR BACKFILL AND SPECIAL BACKFILL. INCLUDES COST OF TEMPORARY SHORING DURING STAGE CONSTRUCTION.
4	INCLUDES ALL PREFORMED EXPANSION JOINT FILLER REQUIRED. INCLUDES FURNISHING AND PLACING CONCRETE SEALER.
5	INCLUDES 2207 LB IN EAST ABUTMENT BACKWALL, 5850 LB IN SOUTH CURB WIDENING AND 315 LB IN RETROFIT RAIL END SECTION FOOTINGS, & 230 LB IN SCUPPER DRAIN RECONSTRUCTION.
6	INCLUDES 91 LB FOR NEW CURB PLATES, 218 LB FOR DRAIN BOXES.
8	EXCLUDES INSTALLATION OF NEOPRENE GLAND.
9	INCLUDES INSTALLATION OF NEOPRENE GLAND AND WATER TESTING OF JOINT.
10	INCLUDES 160.8 CY OF CLASS BR OR C STRUCTURAL CONCRETE AND 27,283 LBS OF EPOXY COATED REINFORCING STEEL.
12	INCLUDES 315 S.F. OF SHALLOW REPAIR AT NORTH CURB AND MEDIAN, 187 S.F. OF REGULAR REPAIR AT HOLES IN MEDIAN AND 369 S.F. OF REGULAR REPAIR IN E. ABUT. OF SLAB BRIDGE AND PIER 4.

SEE SHEET 43 FOR WORK ORDERS

THE CONTRACTOR SHALL CONDUCT THEIR OPERATIONS IN SUCH A MANNER THAT ANY PAINT REMOVED DURING DEMOLITION IS CONTAINED, COLLECTED, AND DISPOSED OF IN ACCORDANCE WITH STANDARD SPECIFICATION 2508. BEFORE DELIVERY OF ANY SCRAP STEEL THE CONTRACTOR SHALL PROVIDE A WRITTEN NOTICE TO THE RECEIVING FACILITY. THIS NOTICE SHALL AT A MINIMUM INCLUDE:

1. A NOTICE THAT THE SCRAP STEEL IS COATED WITH PAINT THAT HAS REGULATED MATERIALS AT LEVELS WHICH COULD BE HAZARDOUS TO EMPLOYEES OR THE ENVIRONMENT.
2. A COPY OF THE SCRAPE SAMPLE PROVIDED IN THE CONTRACT DOCUMENTS.
3. A SIGNATURE BLOCK FOR THE RECEIVING FACILITY TO CONFIRM THEIR RECEIPT OF THIS INFORMATION.

A COPY OF THIS NOTICE, SIGNED BY THE RECEIVING FACILITY, SHALL BE RETURNED
TO THE ENGINEER BEFORE ANY SCRAP STEEL IS REMOVED FROM THE PROJECT.

DESIGN HISTORY AT THIS SITE

DES. NO.	TYPE OF WORK
1457	ORIGINAL DESIGN
1471	BRIDGE EXTENSION
177	OVERLAY AND REPAIR
382	REPAIR
108	OVERLAY AND REPAIR

LOCATION:

ON IA 926
OVER DES MOINES RIVER AND
RECREATIONAL TRAIL
T-89N R-28W
SECTION 19
WAHKONSA TOWNSHIP
WEBSTER COUNTY
CITY OF FORT DODGE
MAINT. NO. 9402.5S926
FHWA NO. 052300

DESIGN FOR REPAIRS TO

MULTISPAN CONTINUOUS WELDED PLATE GIRDER BRIDGE PLUS 90'-0 x 58'-0 CONCRETE SLAB BRIDGE

ESTIMATED QUANTITIES & NOTES

STA. 212+21 TO 224+25 NOVEMBER, 2007

WEBSTER COUNTY

IOWA DEPARTMENT OF TRANSPORTATION - HIGHWAY DIVISION

DESIGN SHEET NO. 1 OF 19 FILE NO. 30163 DESIGN NO. 108

WHKS & CO.
ENGINEERS PLANNERS LAND SURVEYORS
MASON CITY, IA DUBUQUE, IA AMES, IA ROCHESTER, MN

TRAFFIC CONTROL PLAN

NOTE: THE ROADWAY WILL BE OPEN TO THRU TRAFFIC. REFER TO THE TRAFFIC CONTROL PLAN SHOWN ELSEWHERE IN THESE PLANS.

NOTE:
ROADWAY QUANTITIES SHOWN ELSEWHERE IN THESE PLANS.

THE CONTRACTOR IS ENCOURAGED TO TAKE FULL ADVANTAGE OF SPECIFICATION 1105.15 -- VALUE ENGINEERING INCENTIVE PROPOSAL. A PAMPHLET AND CONCEPTUAL PROPOSAL FORM WILL BE AVAILABLE AT THE PRECONSTRUCTION CONFERENCE.

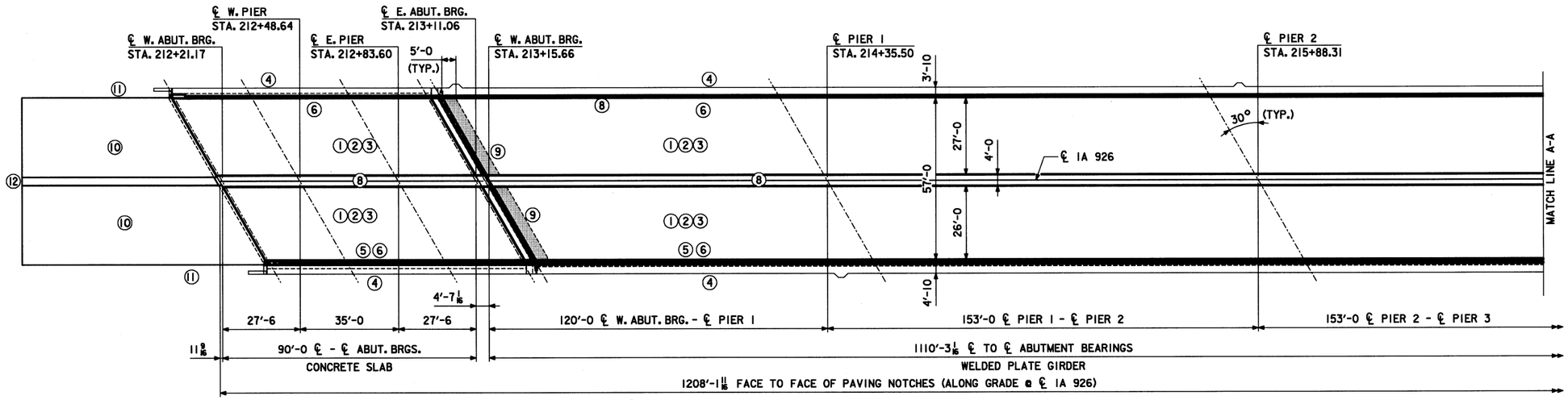

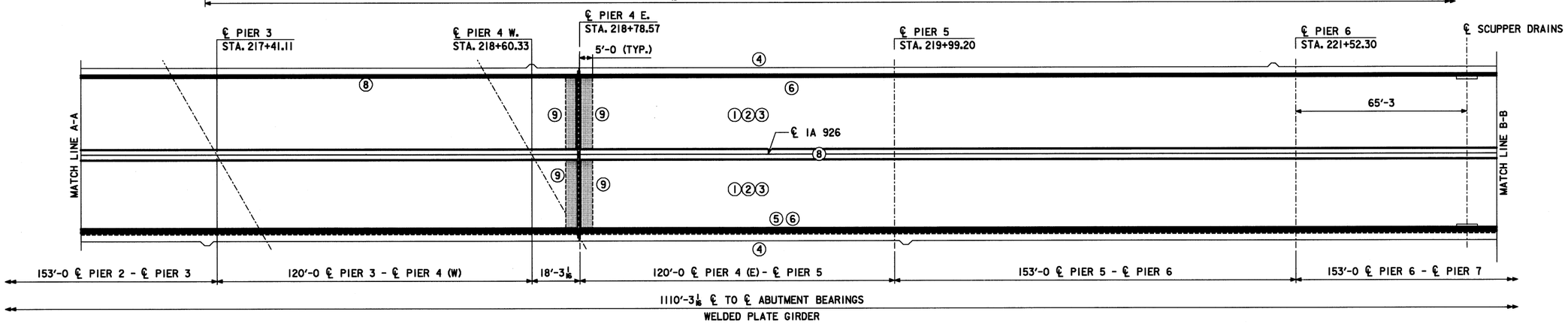

GENERAL NOTES (CONT'D.):

THE CONTRACTOR'S ATTENTION IS DIRECTED TO THE EXISTING CONDUIT IN THE BRIDGE CURBS. IN ORDER TO ENSURE THE EXISTING CONDUITS ARE NOT DAMAGED DURING PLACEMENT OF THE CAST-IN-PLACE BARRIER RAIL, THE CONTRACTOR SHALL BE REQUIRED TO DO THE FOLLOWING:

1. PHYSICALLY LOCATE THE CONDUIT AT APPROXIMATELY 50 FOOT INTERVALS PRIOR TO DRILLING ANY HOLES FOR $\frac{3}{4}$" DIAMETER DOWEL BARS.

2. AFTER COMPLETION OF DRILLING FOR THE $\frac{3}{4}$" DOWEL BARS AND PRIOR TO PLACEMENT OF THE DOWELS, PROVE TO THE INSPECTOR BY A REASONABLE METHOD THE USABILITY OF THE CONDUIT HAS NOT BEEN COMPROMISED.

COST OF THESE OPERATIONS WILL BE CONSIDERED INCIDENTAL TO THE COST OF THE CAST-IN-PLACE BARRIER RAIL. ANY DAMAGE TO THE CONDUIT OR WIRING BY THE CONTRACTOR WILL BE THE RESPONSIBILITY OF THE CONTRACTOR AND REPAIRED AT NO EXTRA COST TO THE STATE.

MINIMUM CLEAR DISTANCE FROM FACE OF CONCRETE TO NEAR REINFORCING BAR IS TO BE 2" UNLESS OTHERWISE NOTED OR SHOWN.

CONSTRUCTION SHALL BE DONE IN STAGES WITH AT LEAST ONE LANE TRAFFIC MAINTAINED AT ALL TIMES IN ACCORDANCE WITH "TRAFFIC CONTROL PLAN" NOTE.

ALL CONCRETE REMOVAL LINES SHALL BE INITIATED WITH A $\frac{3}{4}$ INCH SAWCUT.

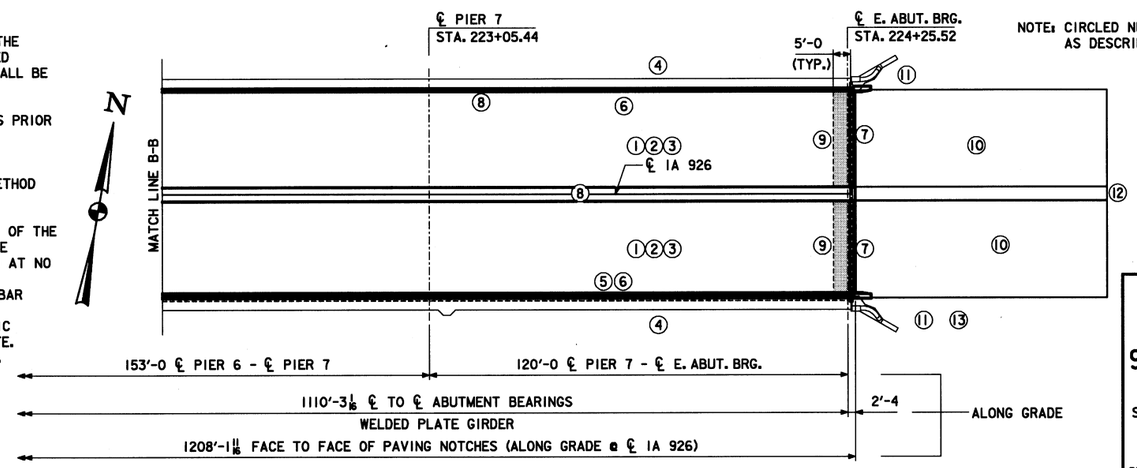

NOTE: CIRCLED NUMBERS ON PLAN REPRESENT LOCATION OF SPECIFIC REPAIR AS DESCRIBED AT BEGINNING OF "GENERAL NOTES" ON DESIGN SHEET 1.

WHKS & CO.
ENGINEERS PLANNERS LAND SURVEYORS
MASON CITY, IA DUBUQUE, IA AMES, IA ROCHESTER, MN

DESIGN FOR REPAIRS TO
MULTISPAN CONTINUOUS WELDED PLATE GIRDER BRIDGE PLUS 90'-0 x 58'-0 CONCRETE SLAB BRIDGE
SITUATION PLAN

STA. 212+21 TO 224+25 NOVEMBER, 2007

WEBSTER COUNTY

IOWA DEPARTMENT OF TRANSPORTATION - HIGHWAY DIVISION

DESIGN SHEET NO. 2 OF 19 FILE NO. 30163 DESIGN NO. 108

DESIGN TEAM S.K.G. / J.J.O. / J.D.K./ M.A.F.	WEBSTER COUNTY	PROJECT NUMBER BRFN-926-0(9)--39-94	SHEET NUMBER 3

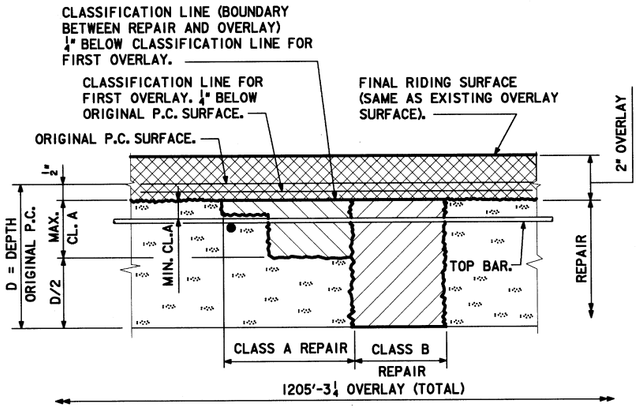

REPAIR AND OVERLAY DEFINITION

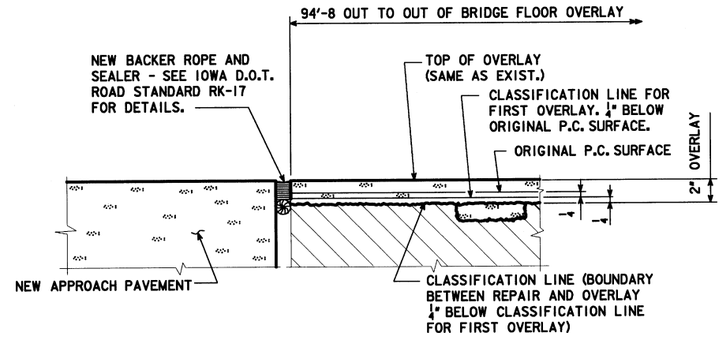

PART LONGITUDINAL SECTION ALONG ROADWAY

WEST ABUTMENT (SLAB BRIDGE)

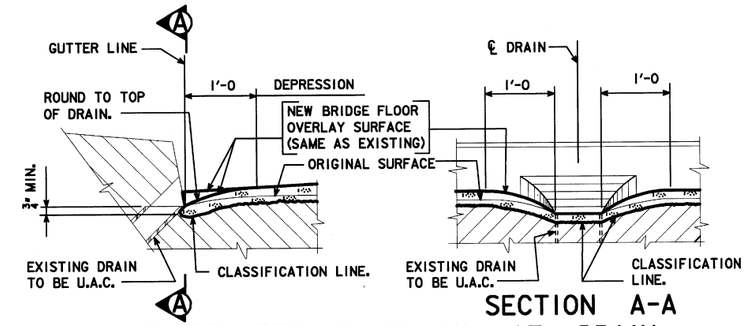

FLOOR REPAIR DETAIL AT DRAIN

(REQUIRED AT 20 LOCATIONS ON NORTH CURB)

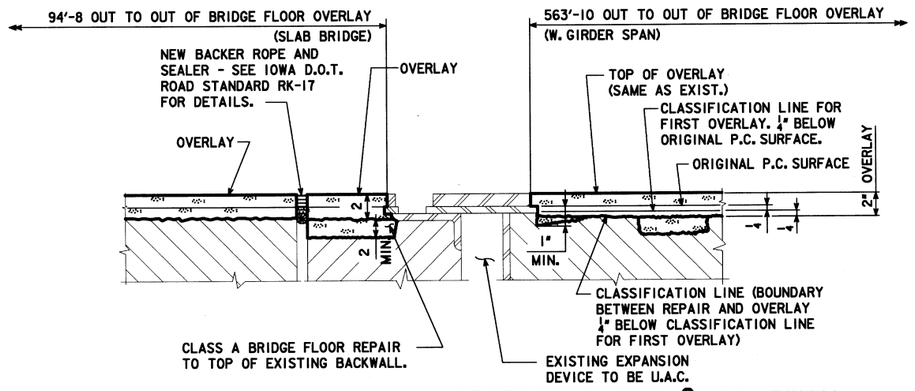

PART LONGITUDINAL SECTION ALONG ℄ ROADWAY

AT WEST ABUTMENT (GIRDER BRIDGE)

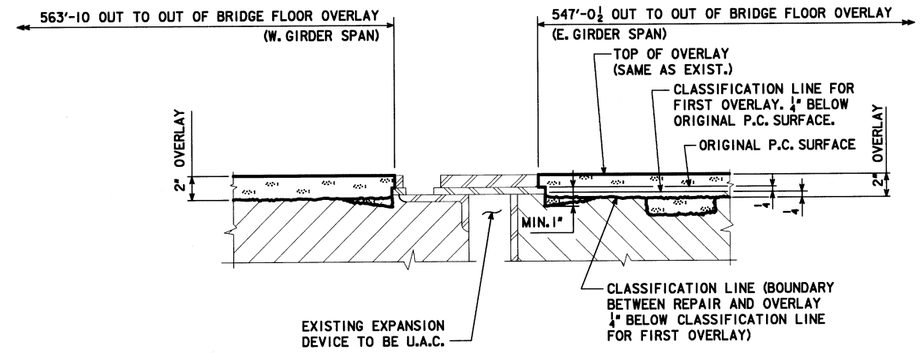

PART LONGITUDINAL SECTION ALONG ℄ ROADWAY

AT PIER 4 (GIRDER BRIDGE)

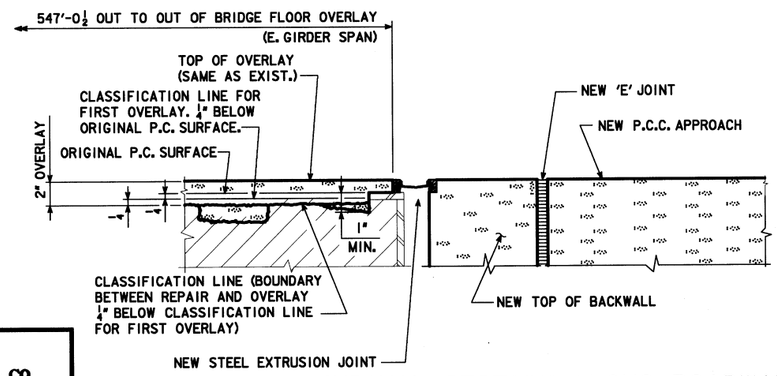

PART LONGITUDINAL SECTION ALONG ROADWAY

EAST ABUTMENT (GIRDER BRIDGE)

WHKS & CO.
ENGINEERS — PLANNERS — LAND SURVEYORS
MASON CITY, IA DUBUQUE, IA AMES, IA ROCHESTER, MN

DESIGN FOR REPAIRS TO

MULTISPAN CONTINUOUS WELDED PLATE GIRDER BRIDGE PLUS 90'-0 x 58'-0 CONCRETE SLAB BRIDGE DECK REPAIR DETAILS

STA. 212+21 TO 224+25 NOVEMBER, 2007

WEBSTER COUNTY

IOWA DEPARTMENT OF TRANSPORTATION - HIGHWAY DIVISION

DESIGN SHEET NO. 3 OF 19 FILE NO. 30163 DESIGN NO. 108

DESIGN TEAM S.K.G. / J.J.O. / J.D.K./ M.A.F. | WEBSTER COUNTY | PROJECT NUMBER BRFN-926-0(9)--39-94 | SHEET NUMBER 4

2/1/2008 11:18:19 AM L:\dept\6\6400.21\Webster 108\drawings\FINAL\Extrusion Submittal\94926009.brg

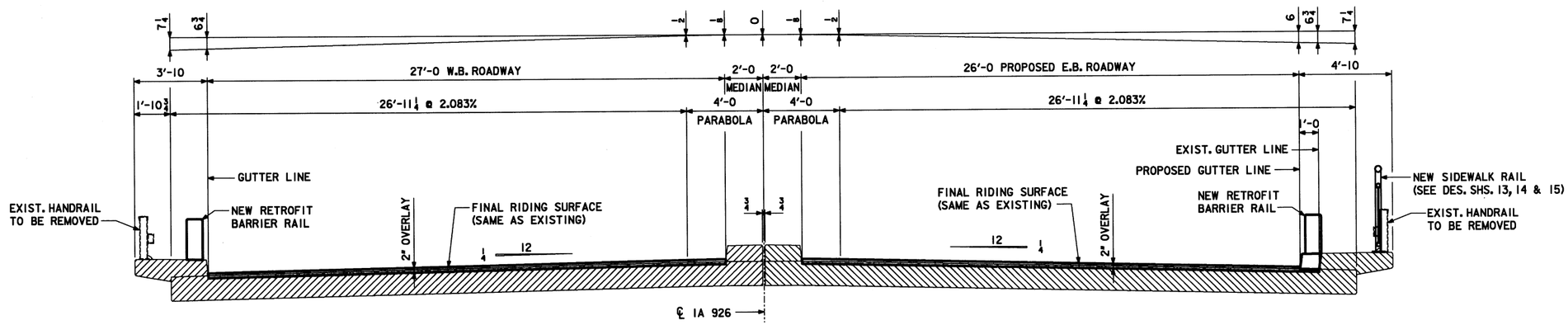

TYPICAL CROSS SECTION OF SLAB SPANS
(LOOKING EAST)

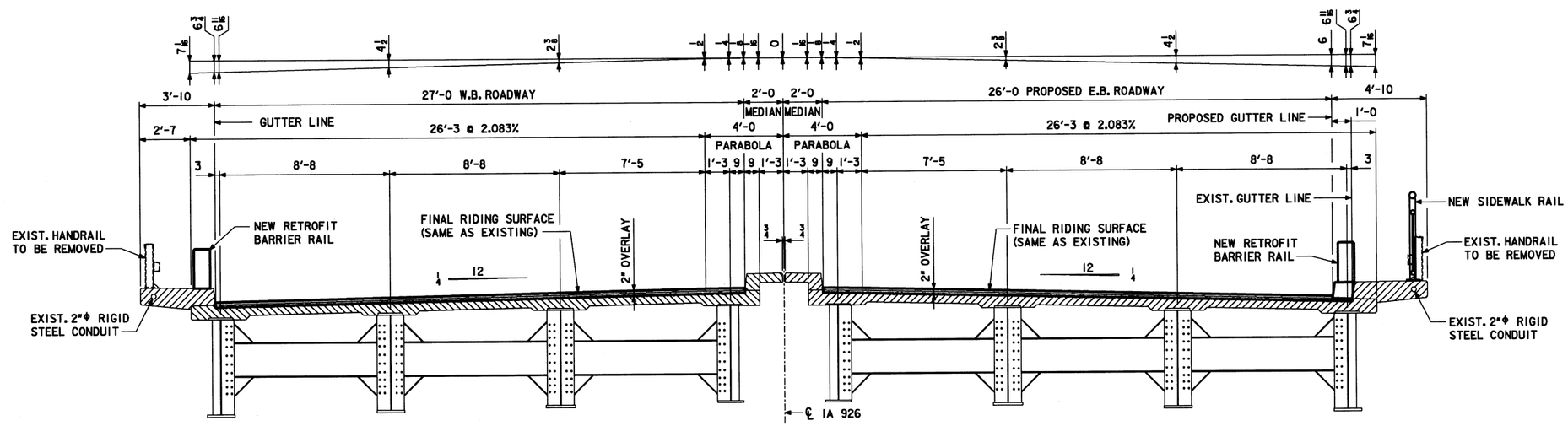

TYPICAL SECTION OF GIRDER SPANS
(LOOKING EAST)

WHKS & CO.
ENGINEERS — PLANNERS — LAND SURVEYORS
MASON CITY, IA DUBUQUE, IA AMES, IA ROCHESTER, MN

DESIGN FOR REPAIRS TO
MULTISPAN CONTINUOUS WELDED PLATE GIRDER BRIDGE PLUS 90'-0 x 58'-0 CONCRETE SLAB BRIDGE DECK REPAIR DETAILS

STA. 212+21 TO 224+25 NOVEMBER, 2007

WEBSTER COUNTY

IOWA DEPARTMENT OF TRANSPORTATION - HIGHWAY DIVISION

DESIGN SHEET NO. 4 OF 19 FILE NO. 30163 DESIGN NO. 108

DESIGN TEAM S.K.G. / J.J.O. / J.D.K./ M.A.F. | WEBSTER COUNTY | PROJECT NUMBER BRFN-926-0(9)--39-94 | SHEET NUMBER 5

2/1/2008 11:18:22 AM L:\dept\6\6400.21\Webster 108\drawings\FINAL\Extrusion Submittal\94926009.brg

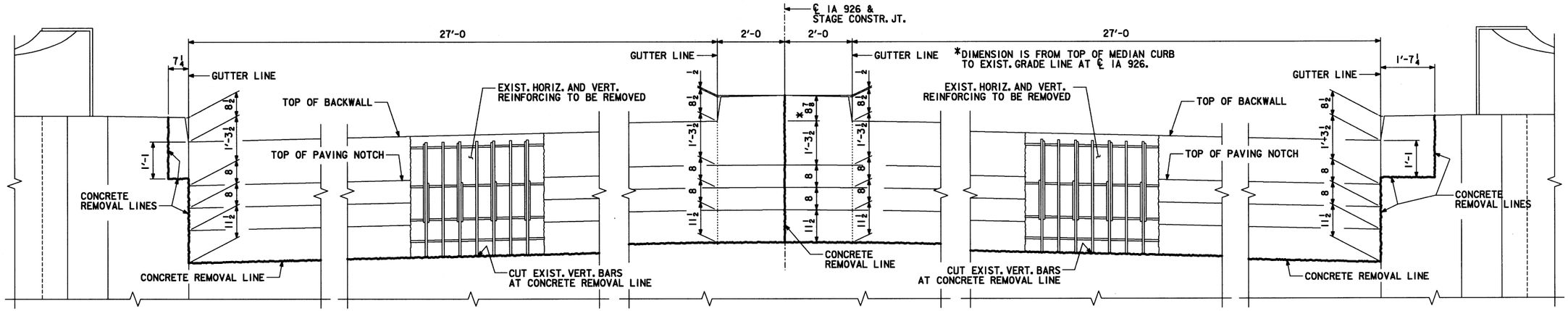

PART REAR ELEVATION OF EAST ABUTMENT

(GIRDER BRIDGE LOOKING WEST)

NOTE: ALL DIMENSIONS ARE ALONG FACE OF EXIST. PAVING NOTCH.

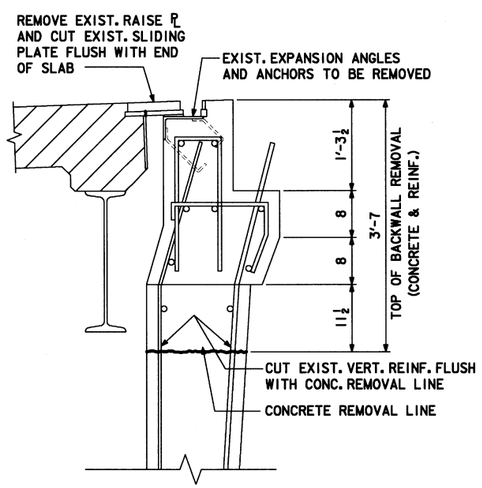

TYPICAL BACKWALL SECTION

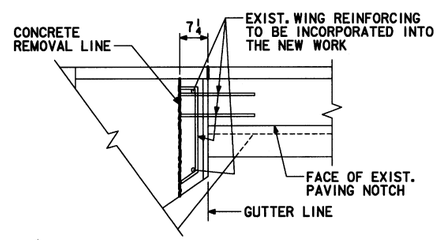

PART PLAN AT SE WING

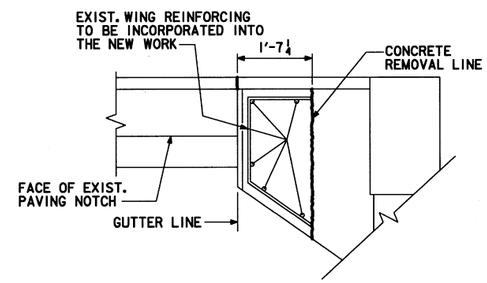

PART PLAN AT NE WING

WHKS & CO.

ENGINEERS — PLANNERS — LAND SURVEYORS

MASON CITY, IA DUBUQUE, IA AMES, IA ROCHESTER, MN

DESIGN FOR REPAIRS TO

MULTISPAN CONTINUOUS WELDED PLATE GIRDER BRIDGE PLUS 90'-0 x 58'-0 CONCRETE SLAB BRIDGE

EAST ABUT. REMOVAL DETAILS

STA. 212+21 TO 224+25 NOVEMBER, 2007

WEBSTER COUNTY

IOWA DEPARTMENT OF TRANSPORTATION - HIGHWAY DIVISION

DESIGN SHEET NO. 5 OF 19 FILE NO. 30163 DESIGN NO. 108

DESIGN TEAM S.K.G. / J.J.O. / J.D.K./ M.A.F. | WEBSTER COUNTY | PROJECT NUMBER BRFN-926-0(9)--39-94 | SHEET NUMBER 6

2/1/2008 11:18:24 AM L:\dept\6\6400.21\Webster 108\drawings\FINAL\Extrusion Submittal\94926009.brg

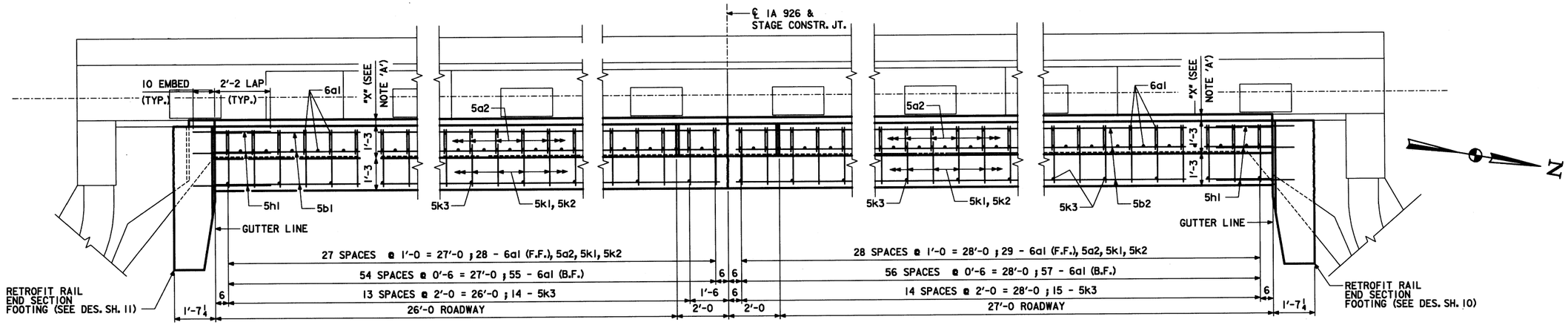

NOTE A:
DIMENSION "X" IS DEPENDANT UPON THE JOINT SETTING NEEDED AT THE TIME OF CONSTRUCTION.

EAST ABUTMENT PLAN
(GIRDER BRIDGE)

*DIMENSION IS FROM TOP OF MEDIAN CURB TO EXIST. GRADE LINE AT ℄ IA 926.

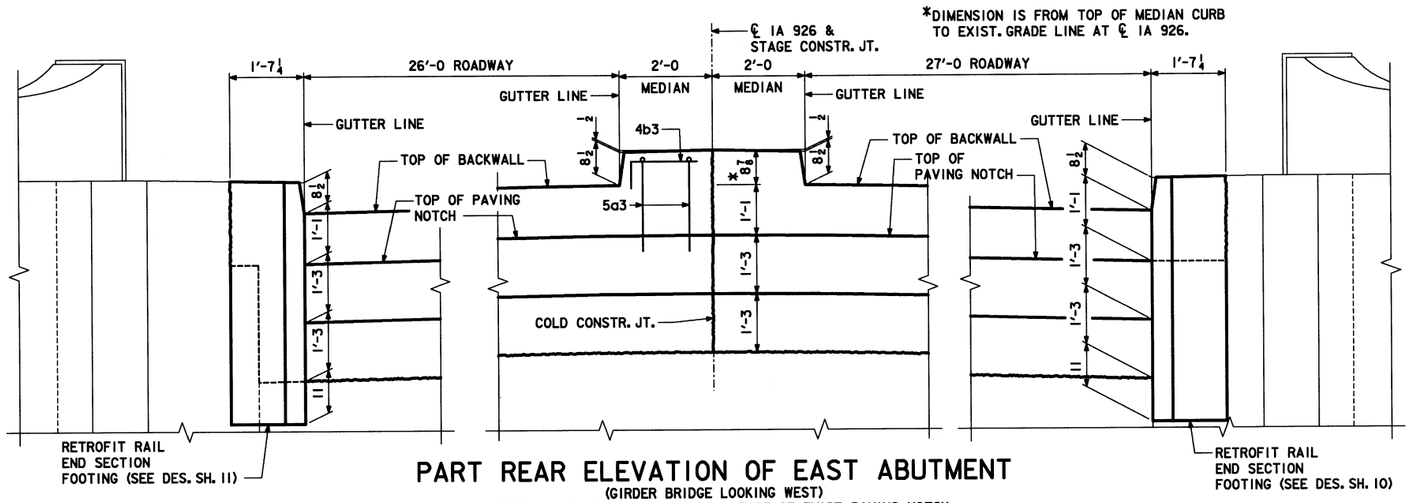

PART REAR ELEVATION OF EAST ABUTMENT
(GIRDER BRIDGE LOOKING WEST)
NOTE: ALL DIMENSIONS ARE ALONG FACE OF EXIST. PAVING NOTCH.

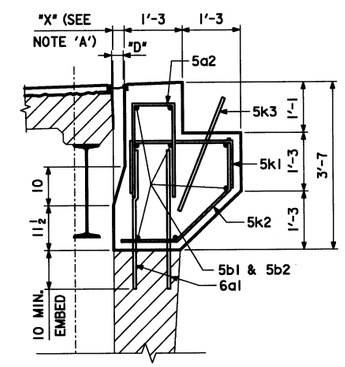

SECTION THRU BACKWALL
NOTE: FOR DIMENSION "D", SEE "EXPANSION JOINT SETTINGS" ON DESIGN SHEET 18.

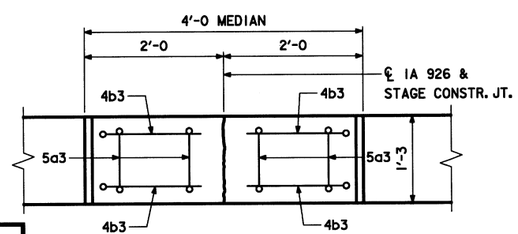

PART MEDIAN PLAN

WHKS & CO.
ENGINEERS — PLANNERS — LAND SURVEYORS
MASON CITY, IA — DUBUQUE, IA — AMES, IA — ROCHESTER, MN

DESIGN FOR REPAIRS TO
MULTISPAN CONTINUOUS WELDED PLATE GIRDER BRIDGE PLUS 90'-0 x 58'-0 CONCRETE SLAB BRIDGE
EAST ABUT. REPAIR DETAILS
STA. 212+21 TO 224+25 — NOVEMBER, 2007
WEBSTER COUNTY
IOWA DEPARTMENT OF TRANSPORTATION - HIGHWAY DIVISION
DESIGN SHEET NO. 6 OF 19 — FILE NO. 30163 — DESIGN NO. 108

DESIGN TEAM S.K.G. / J.J.O. / J.D.K./ M.A.F. | WEBSTER COUNTY | PROJECT NUMBER BRFN-926-0(9)--39-94 | SHEET NUMBER 7

2/1/2008 11:18:26 AM L:\dept\6\6400.21\Webster 108\drawings\FINAL\Extrusion Submittal\94926009.brg

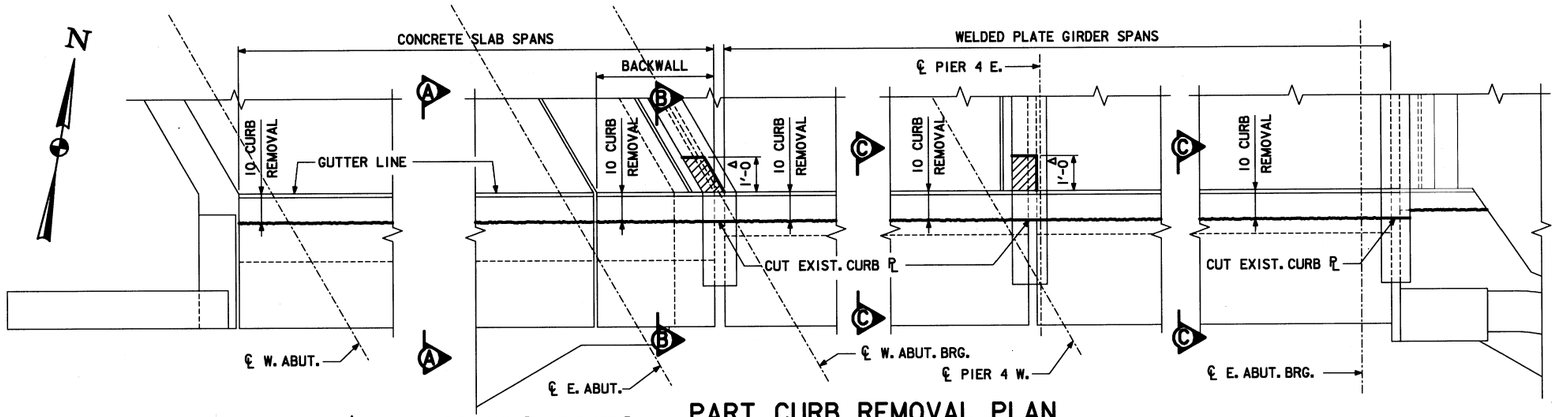

PART CURB REMOVAL PLAN
(SOUTH CURB)

Δ CUT EXIST. EXPANSION ℙ AND RAISE ℙ FLUSH WITH END OF SLAB AND REMOVE HATCHED PORTION AS SHOWN.

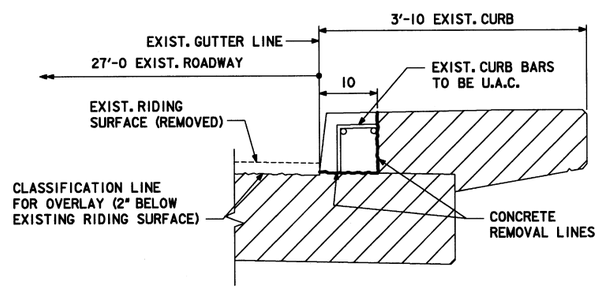

SECTION A-A

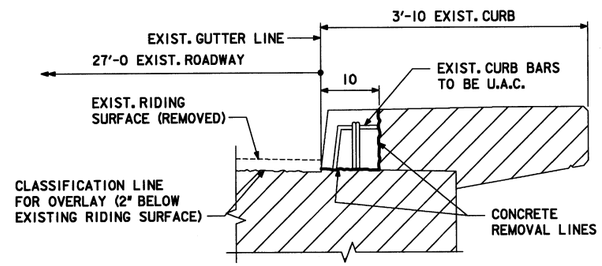

SECTION B-B

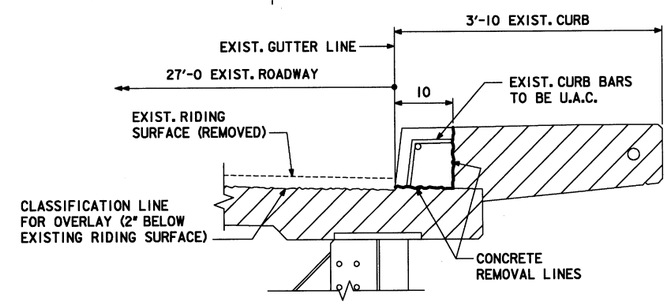

SECTION C-C

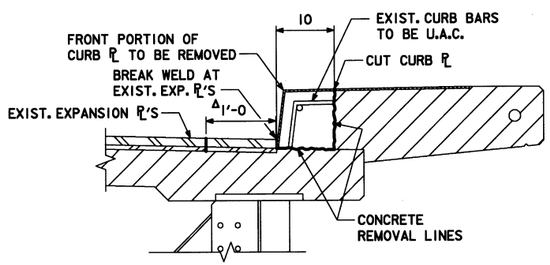

SECTION AT JOINT
(WEST ABUT. & PIER 4 EAST)

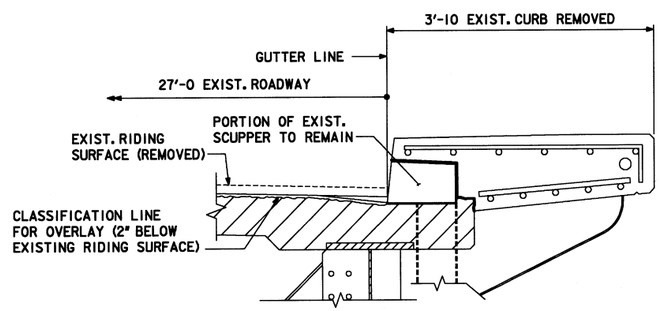

SECTION D-D

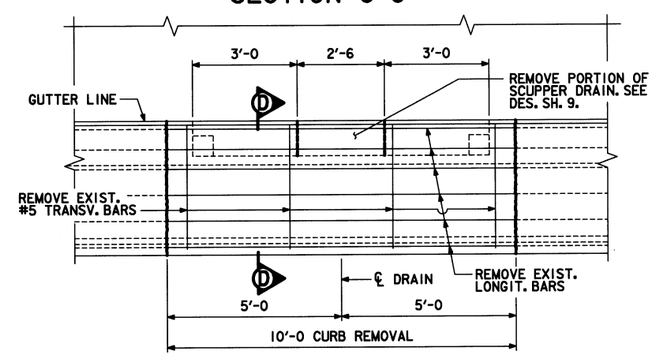

CURB REMOVAL AT SCUPPER DRAINS
(SOUTH CURB SHOWN. DETAIL SIMILAR FOR NORTH CURB.)

DESIGN FOR REPAIRS TO

MULTISPAN CONTINUOUS WELDED PLATE GIRDER BRIDGE PLUS 90'-0 x 58'-0 CONCRETE SLAB BRIDGE CURB REMOVAL DETAILS

STA. 212+21 TO 224+25 NOVEMBER, 2007

WEBSTER COUNTY

IOWA DEPARTMENT OF TRANSPORTATION - HIGHWAY DIVISION

DESIGN SHEET NO. 7 OF 19 FILE NO. 30163 DESIGN NO. 108

WHKS & CO.
ENGINEERS PLANNERS LAND SURVEYORS
MASON CITY, IA DUBUQUE, IA AMES, IA ROCHESTER, MN

DESIGN TEAM S.K.G. / J.J.O. / J.D.K./ M.A.F.

WEBSTER COUNTY | PROJECT NUMBER BRFN-926-0(9)--39-94 | SHEET NUMBER 8

2/1/2008 11:18:28 AM L:\dept\6\6400.21\Webster 108\drawings\FINAL\Extrusion Submittal\94926009.brg

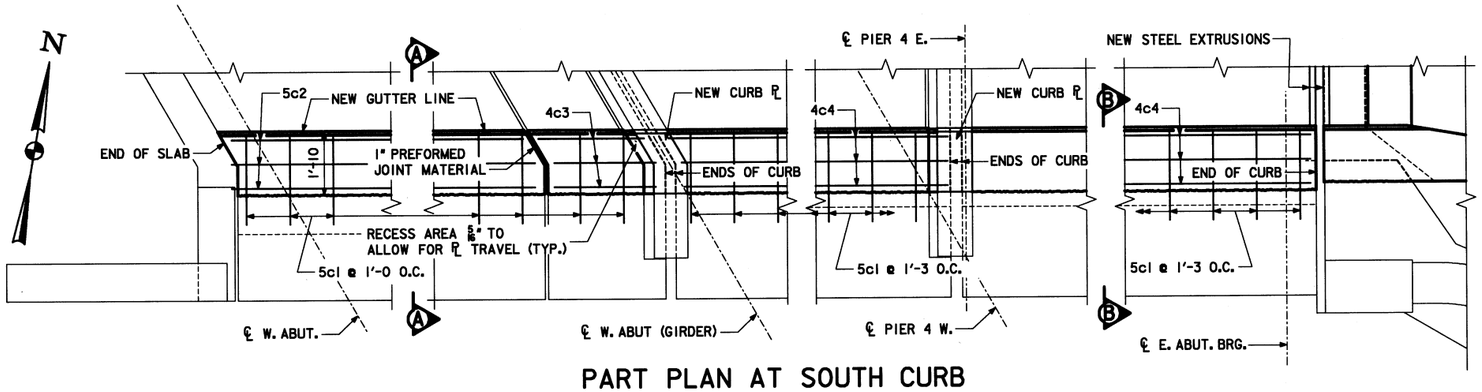

PART PLAN AT SOUTH CURB

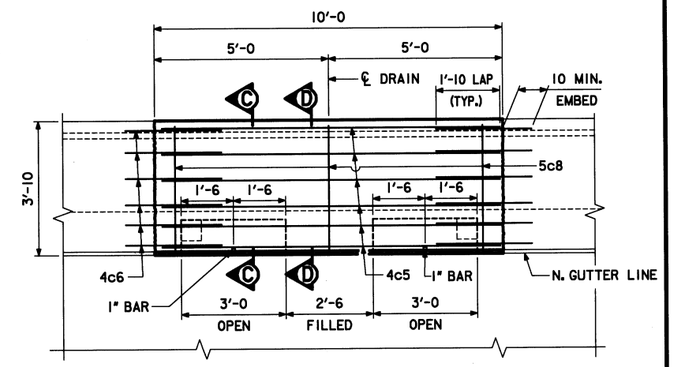

N. CURB REPAIR PLAN AT SCUPPER DRAIN

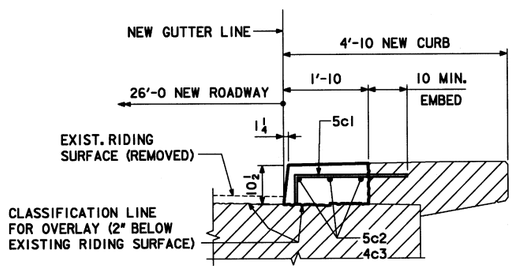

SECTION A-A

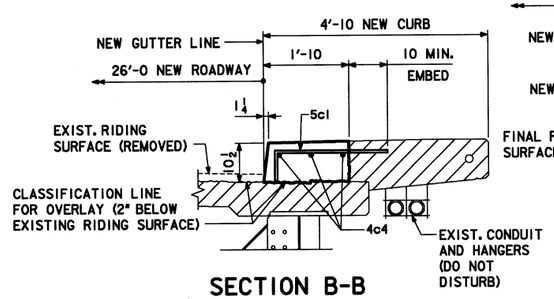

SECTION B-B

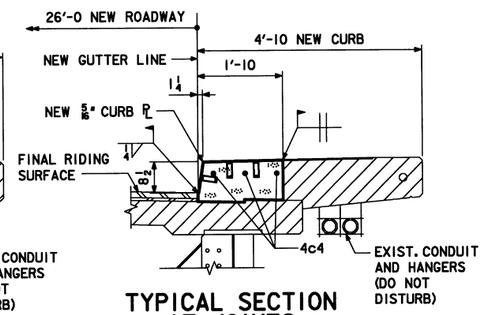

TYPICAL SECTION AT JOINTS

NOTE: LOCATION OF 5c1 TRANSVERSE CURB DOWELS MAY BE ADJUSTED TO AVOID INTERFERENCE WITH EXISTING UTILITY HANGERS ON SOUTH CURB OVERHANG.

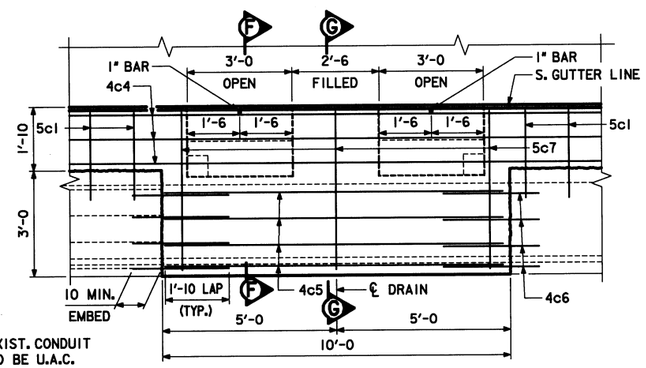

S. CURB REPAIR PLAN AT SCUPPER DRAIN

NOTE: SEE SITUATION PLAN ON DESIGN SHEET 2 FOR SCUPPER DRAIN LOCATION.

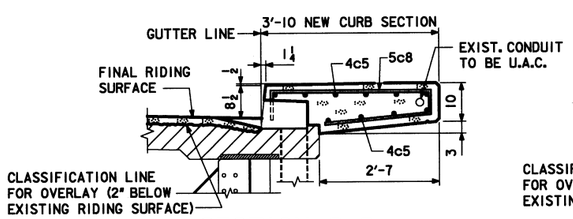

SECTION C-C

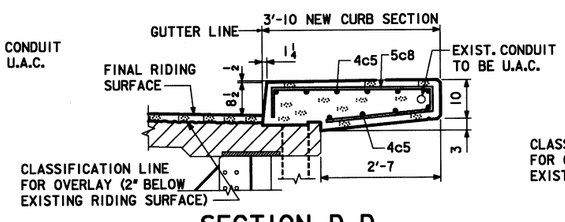

SECTION D-D

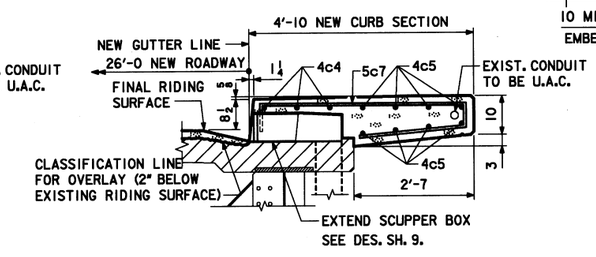

SECTION F-F

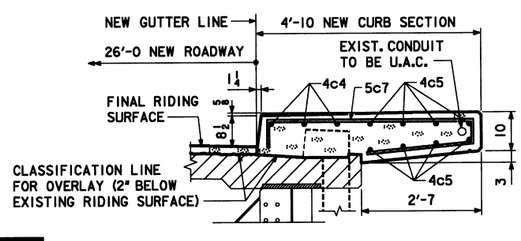

SECTION G-G

DOWEL SETTING NOTE :

THE 6a1, 5c1 & 4c6 BARS SHALL BE SET AS DOWELS IN DRILLED HOLES. HOLES ARE TO BE 10" DEEP. THE DOWELS SHALL BE INSTALLED IN ACCORDANCE WITH THE MANUFACTURER'S RECOMMENDATIONS. ONE OF THE FOLLOWING SYSTEMS SHALL BE USED AS A BONDING AGENT FOR THE DOWELS :

A. POLYMER GROUT SYSTEM IN ACCORDANCE WITH STANDARD SPECIFICATIONS ARTICLE 2301.12 AND CURRENT SUPPLEMENTAL SPECIFICATIONS OF THE IOWA D.O.T. HIGHWAY DIVISION.

B. HYDRAULIC CEMENT GROUT SYSTEMS. DRILLED HOLES ARE TO BE 2 1/2 TIMES THE DOWEL DIAMETER AND ARE TO BE BLOWN CLEAN WITH COMPRESSED AIR IMMEDIATELY PRIOR TO PLACING GROUT. THE HYDRAULIC CEMENT GROUT SHALL BE ONE OF THOSE APPROVED IN MATERIALS I.M. 491.13 AND SHALL BE USED IN ACCORDANCE WITH THE MANUFACTURER'S RECOMMENDATIONS.

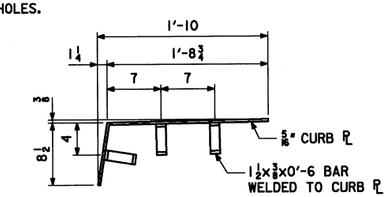

TYPICAL CURB PLATE

WHKS & CO.

ENGINEERS — PLANNERS — LAND SURVEYORS

MASON CITY, IA DUBUQUE, IA AMES, IA ROCHESTER, MN

DESIGN FOR REPAIRS TO

MULTISPAN CONTINUOUS WELDED PLATE GIRDER BRIDGE PLUS 90'-0 x 58'-0 CONCRETE SLAB BRIDGE

E. ABUT. BACKWALL & CURB REPAIR DTLS.

STA. 212+21 TO 224+25 NOVEMBER, 2007

WEBSTER COUNTY

IOWA DEPARTMENT OF TRANSPORTATION - HIGHWAY DIVISION

DESIGN SHEET NO. 8 OF 19 FILE NO. 30163 DESIGN NO. 108

DESIGN TEAM S.K.G. / J.J.O. / J.D.K./ M.A.F.

WEBSTER COUNTY | PROJECT NUMBER BRFN-926-0(9)--39-94 | SHEET NUMBER 9

2/1/2008 11:18:31 AM L:\dept\6\6400.21\Webster 108\drawings\FINAL\Extrusion Submittal\94926009.brg

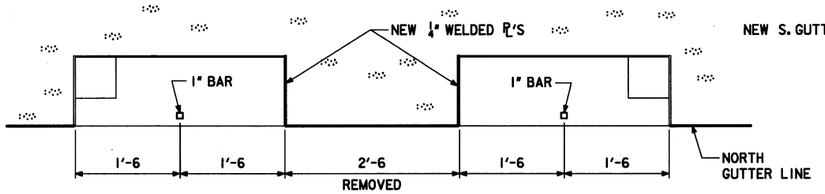

PLAN SECTION THRU NORTH CURB SCUPPER

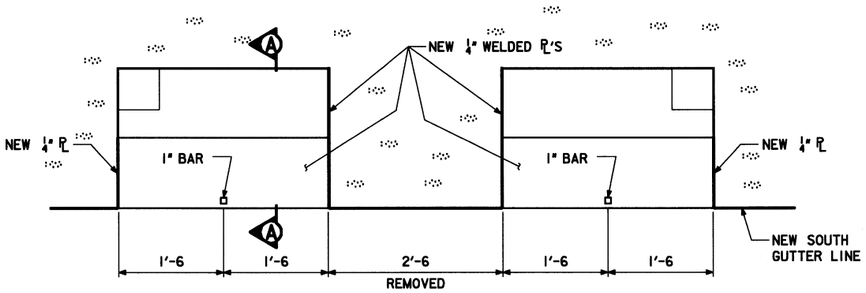

PLAN SECTION THRU SOUTH CURB SCUPPER

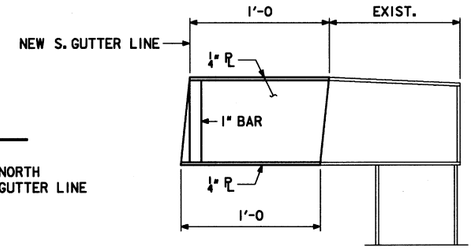

SECTION A-A

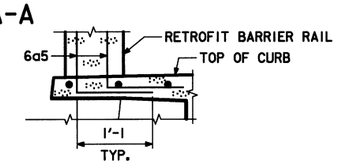

TYPICAL SECTION SHOWING BARRIER RAIL DOWELS AT DRAINS

(S. CURB OF GIRDER BRIDGE SHOWN)
(DETAIL SIMILAR AT EACH DRAIN)

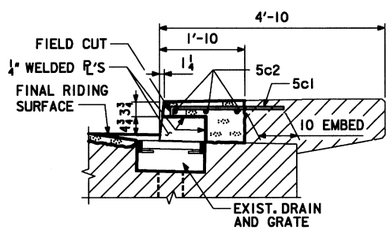

SECTION B-B

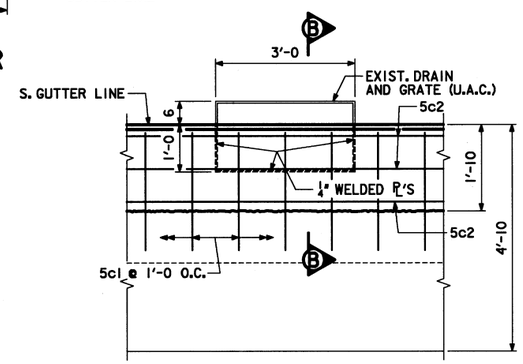

PART PLAN VIEW OF DRAIN

(S. GUTTER LINE OF SLAB BRIDGE)

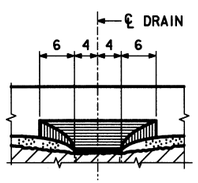

CURB ELEVATION AT TYPICAL DRAIN

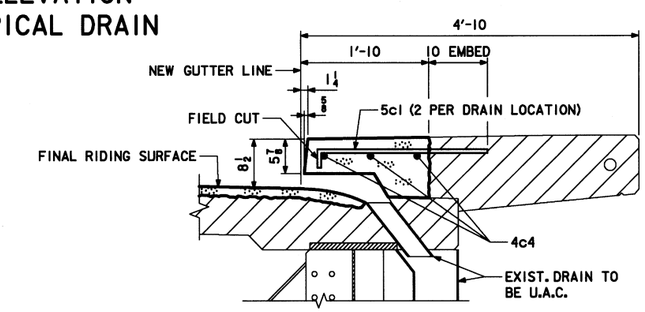

SOUTH CURB SECTION THRU TYPICAL DRAIN

(REQUIRED AT 19 LOCATIONS)

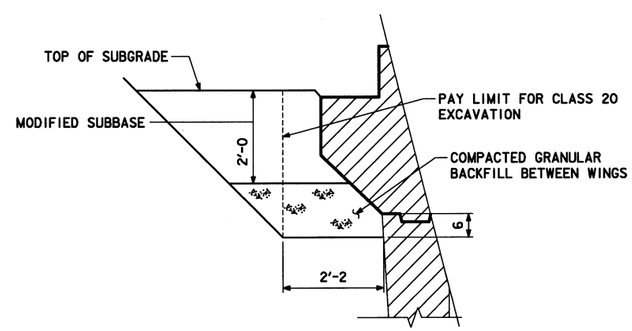

GRANULAR BACKFILL DETAILS

NOTE: MODIFIED SUBBASE MAY BE SUBSTITUTED FOR GRANULAR BACKFILL.

EPOXY COATED REINFORCING STEEL

	MARK	LOCATION	SHAPE	NO.	LENGTH	WEIGHT
EAST ABUTMENT BACKWALL	6a1	BACKWALL, VERT., DOWEL	—	169	3'-2	804
	5a2	BACKWALL, VERT., HAIRPIN	⊏	57	4'-11	292
	5a3	MEDIAN, VERT., HAIRPIN	⊏	4	6'-7	27
	5b1	BACKWALL, LONGITUDINAL	—	8	27'-7	230
	5b2	BACKWALL, LONGITUDINAL	—	8	28'-7	238
	4b3	MEDIAN, HORIZONTAL	⌐	4	3'-3	9
	5k1	PAVING NOTCH	⊓	57	4'-2	248
	5k2	PAVING NOTCH	⌊	57	3'-5	203
	*5k3	PAVING NOTCH	—	29	3'-6	106
	5h1	BACKWALL, DOWELS	—	16	3'-0	50
SOUTH CURB	5c1	CURB, TRANSV., DOWEL	⌐	989	3'-2	3267
	5c2	CURB, LONGIT., SLAB BRIDGE	—	9	32'-3	303
	4c3	CURB, LONGIT., SLAB BRIDGE	—	3	2'-4	5
	4c4	CURB, LONGIT., STEEL BRIDGE	—	90	37'-10	2275
CURB AT DRAINS	4c5	CURB, LONGIT., N. & S. SCUPPER	—	18	9'-8	116
	4c6	CURB, LONGIT., DOWEL, N. & S. SCUPPER	—	36	2'-10	68
	5c7	CURB, TRANSV., S. SCUPPER	⊐	3	7'-10	25
	5c8	CURB, TRANSV., N. SCUPPER	⊐	3	6'-10	21
					TOTAL (LBS)	8287

*5k3 IS NON-COATED DEFORMED STAINLESS STEEL.

BENT BAR DETAILS

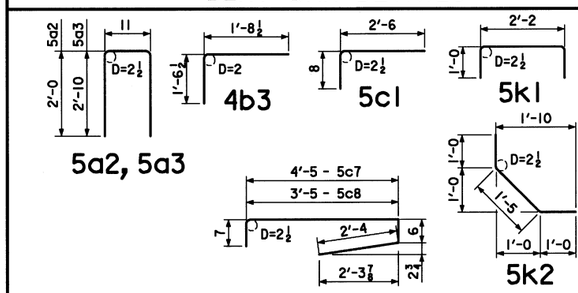

NOTE: ALL DIMENSIONS ARE OUT TO OUT. D = PIN DIA.

CONCRETE PLACEMENT QUANTITY

LOCATION	TOTAL (CY)
BACKWALL AND PAVING NOTCH	15.2
RAIL END SECTION FOOTINGS	2.1
SOUTH CURB WIDENING 1189.2 L.F. @ 0.057 CY PER L.F.	68.6
CURB @ SCUPPER DRAINS (0.8 CY S. CURB & 1.2 CY N. CURB)	2.0
TOTAL (CY)	87.9

WHKS & CO.
ENGINEERS — PLANNERS — LAND SURVEYORS
MASON CITY, IA DUBUQUE, IA AMES, IA ROCHESTER, MN

DESIGN FOR REPAIRS TO

MULTISPAN CONTINUOUS WELDED PLATE GIRDER BRIDGE PLUS 90'-0 x 58'-0 CONCRETE SLAB BRIDGE

E. ABUT. BACKWALL & CURB REPAIR DTLS.

STA. 212+21 TO 224+25 NOVEMBER, 2007

WEBSTER COUNTY

IOWA DEPARTMENT OF TRANSPORTATION - HIGHWAY DIVISION

DESIGN SHEET NO. 9 OF 19 FILE NO. 30163 DESIGN NO. 108

DESIGN TEAM S.K.G. / J.J.O. / J.D.K./ M.A.F. | WEBSTER COUNTY | PROJECT NUMBER BRFN-926-0(9)--39-94 | SHEET NUMBER 10

2/1/2008 11:18:33 AM L:\dept\6\6400.21\Webster 108\drawings\FINAL\Extrusion Submittal\94926009.brg

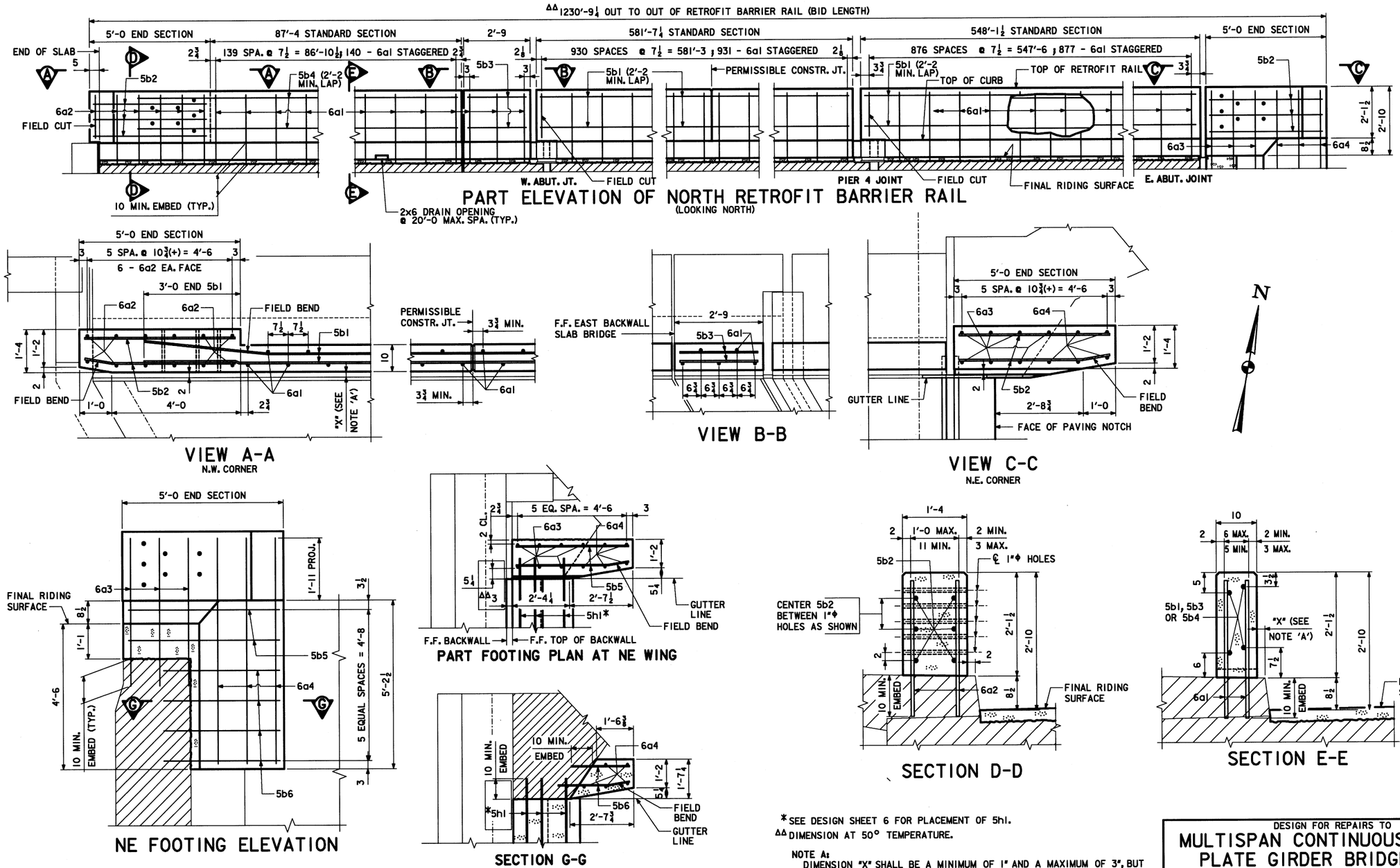

*SEE DESIGN SHEET 6 FOR PLACEMENT OF 5h1.

ΔΔ DIMENSION AT 50° TEMPERATURE.

NOTE A:
DIMENSION "X" SHALL BE A MINIMUM OF 1" AND A MAXIMUM OF 3", BUT MUST BE CONSTANT FOR FULL LENGTH OF BRIDGE, HOWEVER APPROXIMATELY 10 LINEAR FEET AT EITHER END OF STANDARD RAIL SECTION SHALL BE TRANSITIONED TO 2" AT END SECTION AS SHOWN.

WHKS & CO.
ENGINEERS — PLANNERS — LAND SURVEYORS
MASON CITY, IA DUBUQUE, IA AMES, IA ROCHESTER, MN

DESIGN FOR REPAIRS TO
MULTISPAN CONTINUOUS WELDED PLATE GIRDER BRIDGE PLUS 90'-0 x 58'-0 CONCRETE SLAB BRIDGE
NORTH RETROFIT BARRIER RAIL

STA. 212+21 TO 224+25 NOVEMBER, 2007

WEBSTER COUNTY
IOWA DEPARTMENT OF TRANSPORTATION - HIGHWAY DIVISION

DESIGN SHEET NO. 10 OF 19 FILE NO. 30163 DESIGN NO. 108

DESIGN TEAM S.K.G. / J.J.O. / J.D.K./ M.A.F. | WEBSTER COUNTY | PROJECT NUMBER BRFN-926-0(9)--39-94 | SHEET NUMBER 11

2/1/2008 11:18:36 AM L:\dept\6\6400.21\Webster 108\drawings\FINAL\Extrusion Submittal\94926009.brg

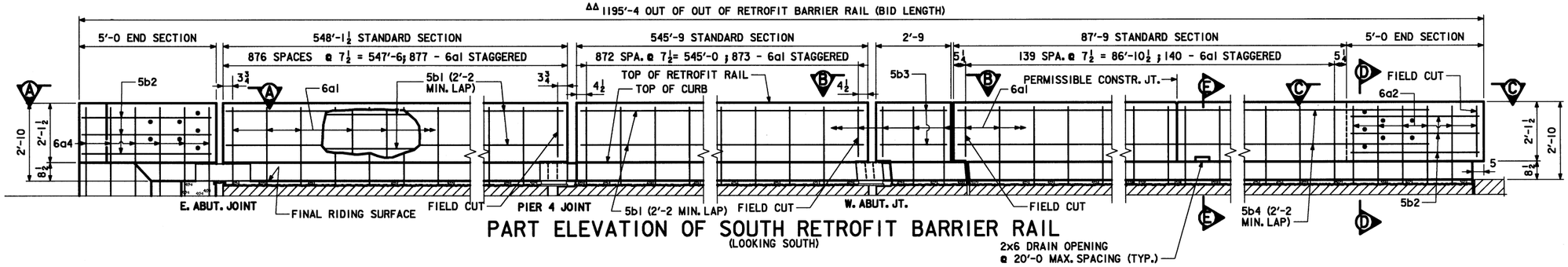

PART ELEVATION OF SOUTH RETROFIT BARRIER RAIL
(LOOKING SOUTH)

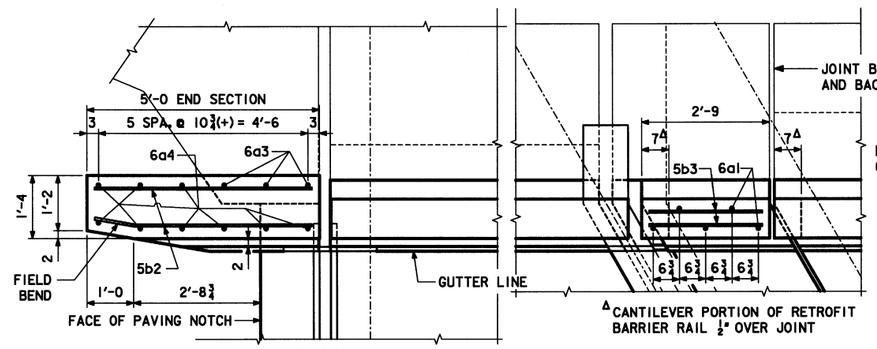

VIEW A-A
S.E. CORNER

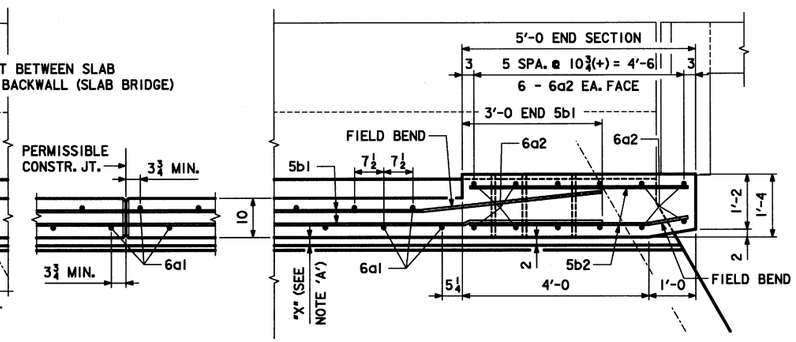

VIEW B-B

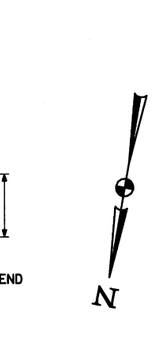

VIEW C-C
S.W. CORNER

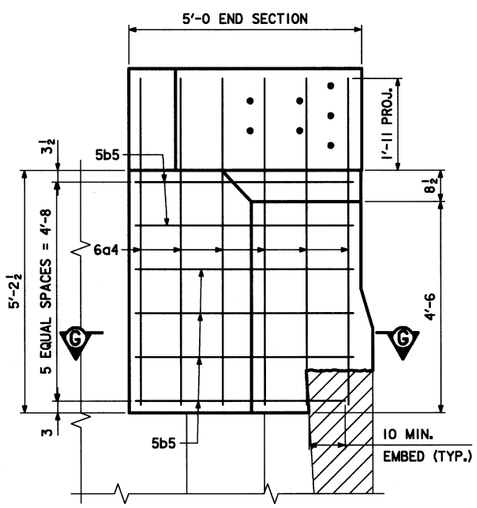

SE FOOTING ELEVATION

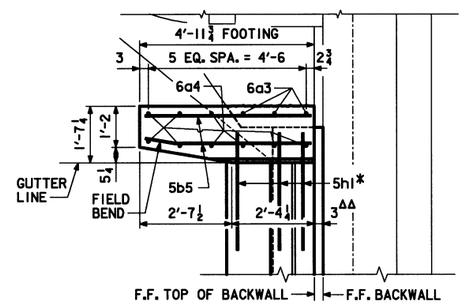

PART FOOTING PLAN AT SE WING

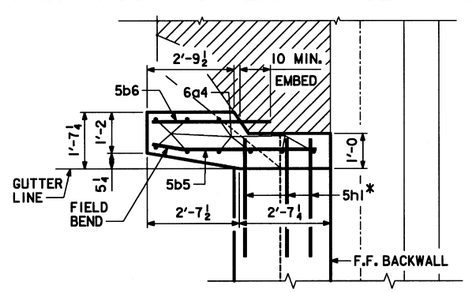

SECTION G-G

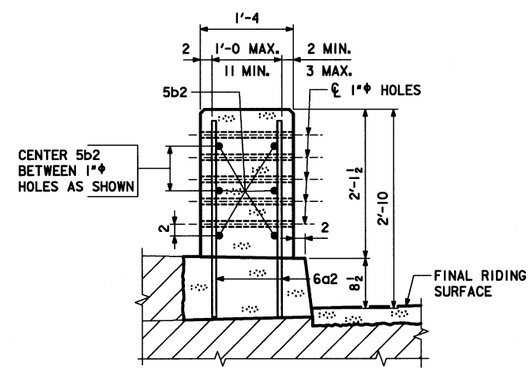

SECTION D-D

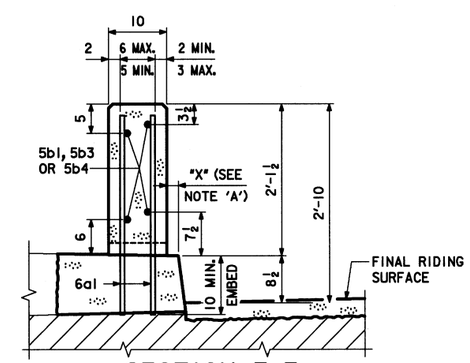

SECTION E-E

FOR NOTE "A" SEE DESIGN SHEET 10.

* SEE DESIGN SHEET 6 FOR PLACEMENT OF 5h1.

ΔΔ DIMENSION AT 50° TEMPERATURE.

WHKS & co.
ENGINEERS PLANNERS LAND SURVEYORS
MASON CITY, IA DUBUQUE, IA AMES, IA ROCHESTER, MN

DESIGN FOR REPAIRS TO
MULTISPAN CONTINUOUS WELDED PLATE GIRDER BRIDGE PLUS 90'-0 x 58'-0 CONCRETE SLAB BRIDGE SOUTH RETROFIT BARRIER RAIL
STA. 212+21 TO 224+25 NOVEMBER, 2007
WEBSTER COUNTY
IOWA DEPARTMENT OF TRANSPORTATION - HIGHWAY DIVISION
DESIGN SHEET NO. 11 OF 19 FILE NO. 30163 DESIGN NO. 108

DESIGN TEAM S.K.G. / J.J.O. / J.D.K./ M.A.F. | WEBSTER COUNTY | PROJECT NUMBER BRFN-926-0(9)--39-94 | SHEET NUMBER 12

2/1/2008 11:18:39 AM L:\dept\6\6400.21\Webster 108\drawings\FINAL\Extrusion Submittal\94926009.brg

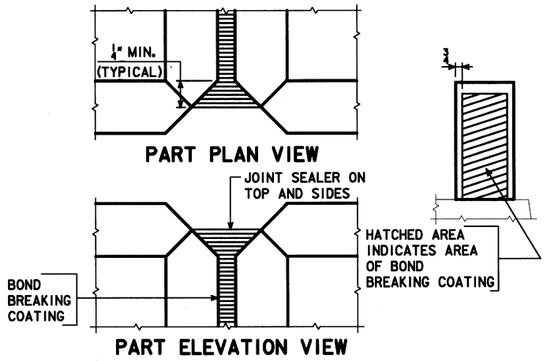

RETROFIT BARRIER RAIL JOINT DETAILS

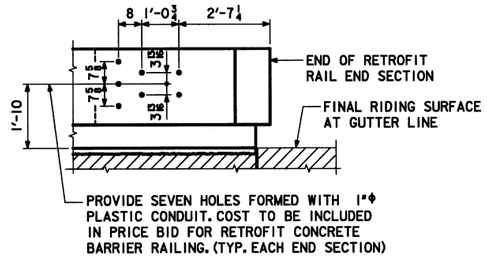

HOLE PLACEMENT DIAGRAM

EPOXY COATED REINFORCING STEEL

			NORTH RETROFIT RAIL			SOUTH RETROFIT RAIL		
MARK	LOCATION	SHAPE	NO.	LENGTH	WEIGHT	NO.	LENGTH	WEIGHT
6a1	VERT., DOWELS, BARRIER RAIL	——	1943	2'-10	8268	1823	2'-10	7757
6a2	VERT., DOWELS, WEST END SECTION	——	12	2'-10	51	12	2'-10	51
*6a3	VERT., DOWELS, EAST END SECTION	——	7	4'-6	47	3	4'-6	20
*6a4	VERT., FTG., EAST END SECTION	——	5	6'-11	52	9	6'-11	94
6a5	VERT., BARRIER RAIL	┌	10	3'-0	45	72	3'-0	324
5b1	LONGIT., BARRIER RAIL	——	124	38'-9	5012	120	38'-9	4850
5b2	LONGIT., END SECTIONS	——	12	4'-8	58	12	4'-8	58
5b3	LONGIT., BARRIER RAIL	——	4	2'-5	10	4	2'-5	10
5b4	LONGIT., BARRIER RAIL	——	12	31'-6	394	12	31'-7	395
*5b5	LONGIT., FTG., EAST END SECTION	——	4	4'-8	19	8	4'-8	39
*5b6	LONGIT., FTG., EAST END SECTION	——	8	3'-6	29	4	3'-8	15
			TOTAL (LBS)		13,985	TOTAL (LBS)		13,613

*END SECTION FOOTING REINFORCING INCLUDED IN TOTAL "REINFORCING STEEL, EPOXY COATED" QUANTITY.

BENT BAR DETAILS

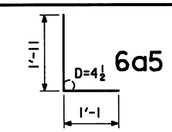

NOTE: ALL DIMENSIONS ARE OUT TO OUT. D = PIN DIA.

DOWEL SETTING NOTE :

THE 6a AND 5b6 BARS SHALL BE SET AS DOWELS IN DRILLED HOLES. HOLES ARE TO BE 10" DEEP. THE DOWELS SHALL BE INSTALLED IN ACCORDANCE WITH THE MANUFACTURER'S RECOMMENDATIONS. ONE OF THE FOLLOWING SYSTEMS SHALL BE USED AS A BONDING AGENT FOR THE DOWELS :

A. POLYMER GROUT SYSTEM IN ACCORDANCE WITH STANDARD SPECIFICATIONS ARTICLE 2301.12 AND CURRENT SUPPLEMENTAL SPECIFICATIONS OF THE IOWA D.O.T. HIGHWAY DIVISION.

B. HYDRAULIC CEMENT GROUT SYSTEMS. DRILLED HOLES ARE TO BE 2½ TIMES THE DOWEL DIAMETER AND ARE TO BE BLOWN CLEAN WITH COMPRESSED AIR IMMEDIATELY PRIOR TO PLACING GROUT. THE HYDRAULIC CEMENT GROUT SHALL BE ONE OF THOSE APPROVED IN MATERIALS I.M. 491.13 AND SHALL BE USED IN ACCORDANCE WITH THE MANUFACTURER'S RECOMMENDATIONS.

CONCRETE PLACEMENT SUMMARY

SECTION	TOTAL
STANDARD SECTION 2404.2 L.F. AT 0.066 CU. YDS. PER LIN. FT	158.7
END SECTIONS 4 AT 0.52 CU. YDS. PER SECTION	2.1
TOTAL (CU. YDS.)	160.8

CONCRETE BARRIER RAIL QUANTITIES

ITEM	UNIT	NORTH RAIL	SOUTH RAIL
RETROFIT CONCRETE BARRIER RAIL	L.F.	1230.8	1195.3

RETROFIT BARRIER RAILING NOTES:

MINIMUM CLEAR DISTANCE FROM FACE OF CONCRETE TO NEAR REINFORCING BAR IS TO BE 2" UNLESS OTHERWISE NOTED OR SHOWN.

ALL EXPOSED CORNERS 90° OR SHARPER ARE TO BE FILLETED WITH A ¾" DRESSED AND BEVELED STRIP.

THE PERMISSIBLE CONSTRUCTION JOINTS ARE TO BE PLACED BETWEEN VERTICAL BARS AT A MINIMUM SPACING OF 20 FEET. CONSTRUCTION JOINT CONTACT SURFACES ARE TO BE COATED WITH AN APPROVED BOND BREAKER.

COST OF JOINT SEALER AND BOND BREAKER SHALL BE CONSIDERED INCIDENTAL TO OTHER CONSTRUCTION.

THE RETROFIT BARRIER RAIL IS TO BE BID ON A LINEAL FOOT BASIS MEASURED FROM END TO END OF RAIL. THE NUMBER OF LINEAL FEET OF RETROFIT BARRIER RAIL INSTALLED WILL BE PAID FOR AT THE CONTRACT PRICE PER LINEAL FOOT BASED ON PLAN QUANTITIES. PRICE BID FOR RETROFIT CONCRETE BARRIER RAILING SHALL BE FULL COMPENSATION FOR FURNISHING ALL MATERIAL (INCLUDING REINF. STEEL AND 1"Φ PLASTIC CONDUIT) PLUS ALL OF THE EQUIPMENT AND LABOR REQUIRED TO ERECT THE RAIL IN ACCORDANCE WITH THESE PLANS AND CURRENT SPECIFICATIONS.

CONCRETE BARRIER RAILS PLACED USING THE SLIPFORM METHOD WILL REQUIRE THE USE OF A CLASS BR CONCRETE IN ACCORDANCE WITH ARTICLE 2513.03B OF THE STANDARD SPECIFICATION. CAST-IN-PLACE BARRIER RAILS SHALL USE CLASS C MIX. CLASS D CONCRETE IS NOT PERMITTED FOR CONCRETE BARRIER RAILS (CAST-INPLACE OR SLIPFORMED METHOD).

ALL REINFORCING STEEL IS TO BE GRADE 60 AND EPOXY COATED.

THE JOINT SEALER SHALL BE LIGHT GRAY NONSAG LATEX CAULKING SEALER MARKETED FOR OUTDOOR USE. NO TESTING OR CERTIFICATION IS REQUIRED.

EXISTING BRIDGE RAIL IS NOT TO BE REMOVED UNTIL AUTHORIZED BY THE ENGINEER.

EXCAVATION FOR END SECTIONS SHALL BE BACKFILLED WITH SPECIAL BACKFILL.

THE COST OF FURNISHING AND PLACING SPECIAL BACKFILL IS TO BE INCLUDED IN THE PRICE BID FOR "EXCAVATION, CLASS 20". NO EXTRA PAYMENT WILL BE MADE.

DESIGN FOR REPAIRS TO

MULTISPAN CONTINUOUS WELDED PLATE GIRDER BRIDGE PLUS 90'-0 x 58'-0 CONCRETE SLAB BRIDGE BARRIER RAIL QUANTITIES

STA. 212+21 TO 224+25 NOVEMBER, 2007

WEBSTER COUNTY

IOWA DEPARTMENT OF TRANSPORTATION - HIGHWAY DIVISION

DESIGN SHEET NO. 12 OF 19 FILE NO. 30163 DESIGN NO. 108

ENGLISHREPAIRRETROFITBRIDGES.DGN 1031T - THIS SHEET ISSUED 01-01.

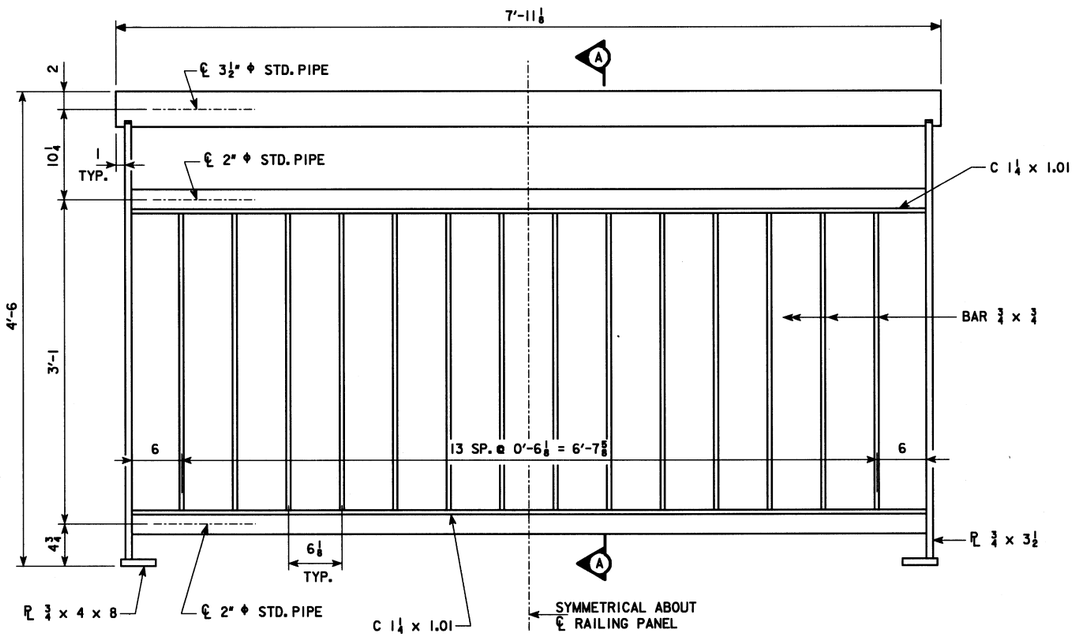

STANDARD SIDEWALK RAILING ELEVATION

(145 REQUIRED)

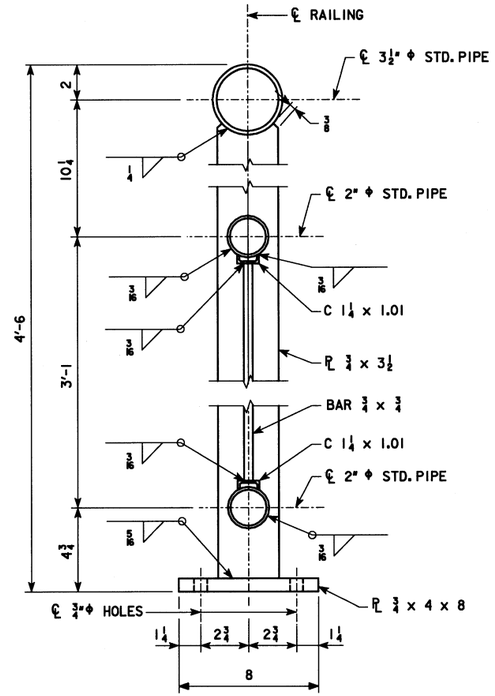

PART SECTION A-A

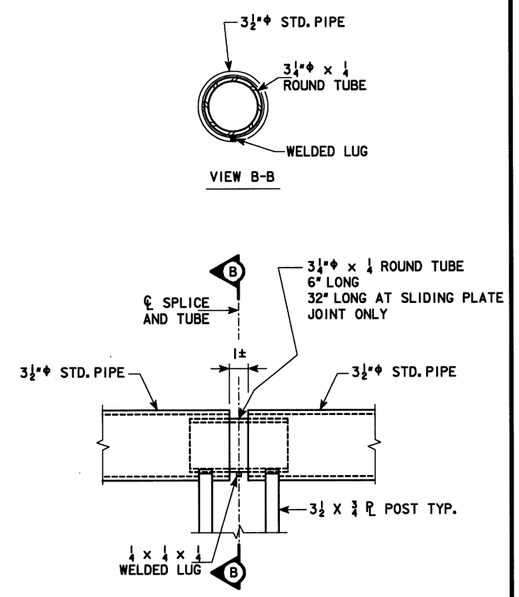

RAILING PIPE SPLICE DETAILS

(147 REQUIRED)

NOTE:
APPLY A THIN LAYER OF CAULK TO ENTIRE BOTTOM SURFACE OF BASE PLATE AND EDGES OF SHIM(S) IF USED. REMOVE EXCESS CAULK AFTER POST PLACEMENT AND APPLY NEAT CAULK BEAD ALONG PLATE EDGES.

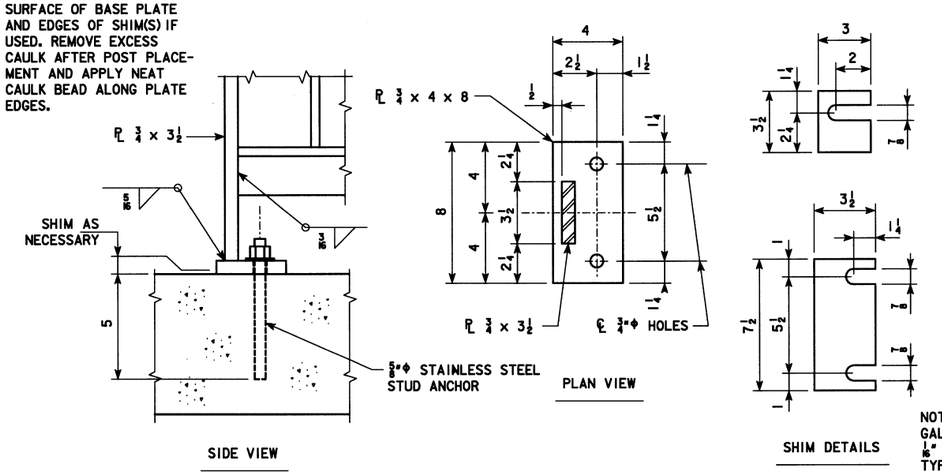

NOTE: PROVIDE TWO GALVANIZED STEEL 1/16" SHIMS OF EACH TYPE FOR EACH POST BASE PLATE - USE AS NECESSARY.

POST BASE PLATE DETAILS

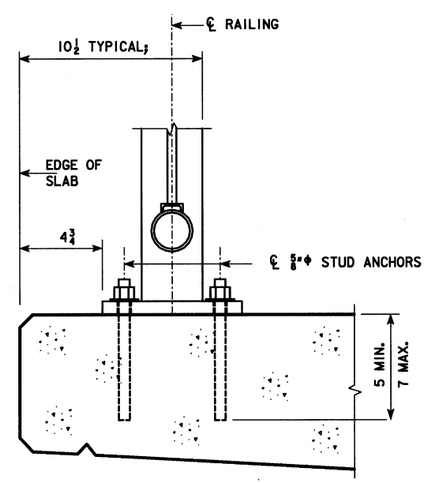

RAIL MOUNTING DETAIL

WHKS & CO.
ENGINEERS — PLANNERS — LAND SURVEYORS
MASON CITY, IA DUBUQUE, IA AMES, IA ROCHESTER, MN

DESIGN FOR REPAIRS TO
MULTISPAN CONTINUOUS WELDED PLATE GIRDER BRIDGE PLUS 90'-0 x 58'-0 CONCRETE SLAB BRIDGE
SIDEWALK RAILING DETAILS

STA. 212+21 TO 224+25 NOVEMBER, 2007

WEBSTER COUNTY
IOWA DEPARTMENT OF TRANSPORTATION - HIGHWAY DIVISION

DESIGN SHEET NO. 13 OF 19 FILE NO. 30163 DESIGN NO. 108

DESIGN TEAM S.K.G. / J.J.O. / J.D.K./ M.A.F. | WEBSTER COUNTY | PROJECT NUMBER BRFN-926-0(9)--39-94 | SHEET NUMBER 14

2/1/2008 11:18:44 AM L:\dept\6\6400.21\Webster 108\drawings\FINAL\Extrusion Submittal\94926009.brg

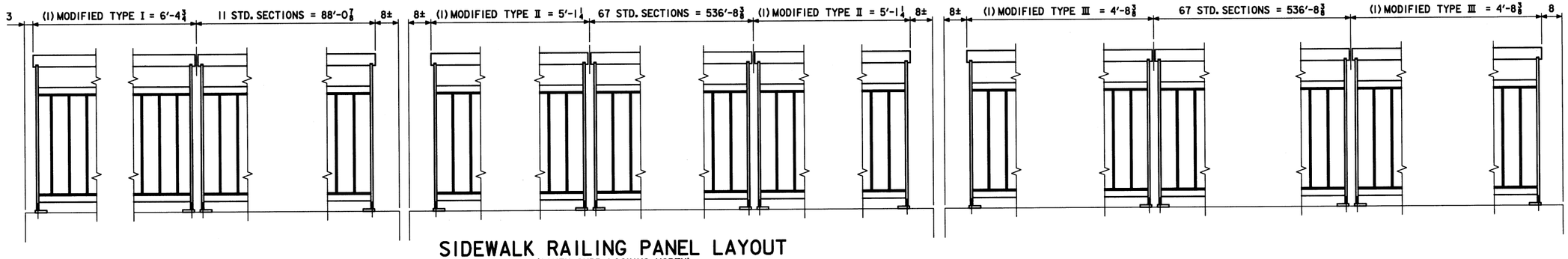

SIDEWALK RAILING PANEL LAYOUT
(SOUTH CURB LOOKING NORTH)

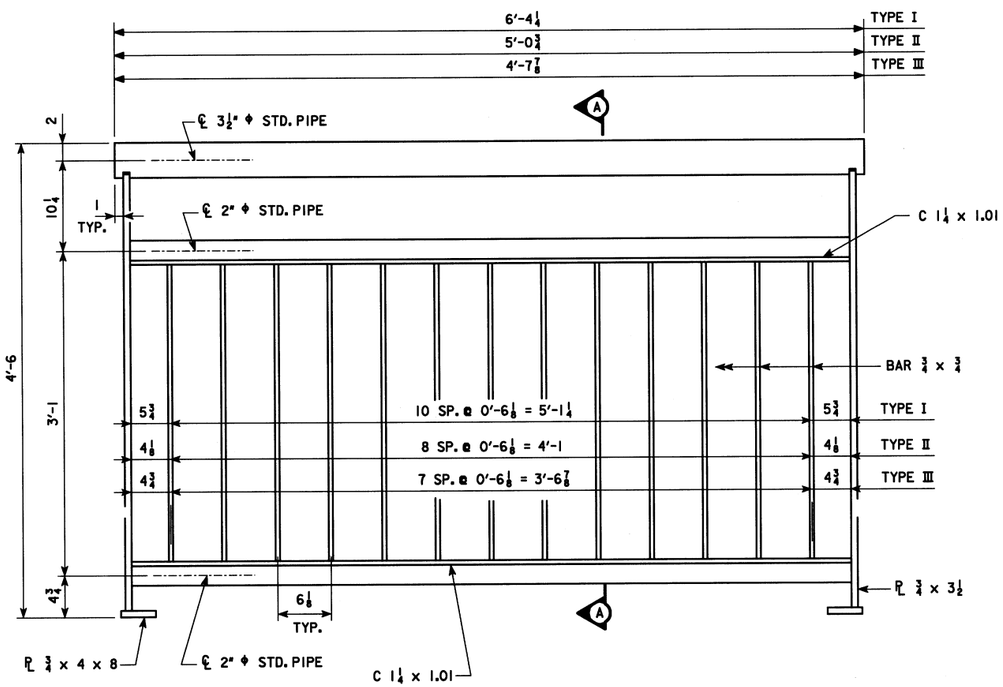

MODIFIED SIDEWALK RAILING ELEVATION
(TYPE I - 1 REQUIRED)
(TYPE II - 2 REQUIRED)
(TYPE III - 2 REQUIRED)

WHKS & CO.
ENGINEERS — PLANNERS — LAND SURVEYORS
MASON CITY, IA DUBUQUE, IA AMES, IA ROCHESTER, MN

DESIGN FOR REPAIRS TO
MULTISPAN CONTINUOUS WELDED PLATE GIRDER BRIDGE PLUS 90'-0 x 58'-0 CONCRETE SLAB BRIDGE SIDEWALK RAILING DETAILS
STA. 212+21 TO 224+25 NOVEMBER, 2007
WEBSTER COUNTY
IOWA DEPARTMENT OF TRANSPORTATION - HIGHWAY DIVISION
DESIGN SHEET NO. 14 OF 19 FILE NO. 30163 DESIGN NO. 108

DESIGN TEAM S.K.G. / J.J.O. / J.D.K./ M.A.F. | WEBSTER COUNTY | PROJECT NUMBER BRFN-926-0(9)--39-94 | SHEET NUMBER 15

2/1/2008 11:18:45 AM L:\dept\6\6400.21\Webster 108\drawings\FINAL\Extrusion Submittal\94926009.brg

RAILING NOTES

STANDARD PIPE SHALL COMPLY WITH ASTM A53 GRADE B TYPE E. ROUND TUBE TO BE SEAMLESS CARBON STEEL MEETING THE REQUIREMENTS OF ASTM A519. ALL OTHER STRUCTURAL STEEL MATERIALS SHALL COMPLY WITH ASTM A709, GRADE 36 MINIMUM.

GRIND SMOOTH ALL BURRS AND SHARP CORNERS OF STEEL RAILING COMPONENTS PRIOR TO GALVANIZING.

THE RAILING COMPONENTS SHALL BE HOT-DIP GALVANIZED IN ACCORDANCE WITH ASTM A 123. FOLLOW GOOD STANDARD PRACTICES IN ACCORDANCE WITH ASTM A 143 AND ASTM A 384. PREPARE THE FABRICATED RAILING SURFACES BY ABRASIVE BLAST CLEANING TO A MINIMUM OF SSPC-SP 6 "COMMERCIAL BLAST CLEANING" PRIOR TO HOT-DIP GALVANIZING. ALL RAILING MEMBERS SHALL BE FLAT AND STRAIGHT AFTER FABRICATION AND GALVANIZING TO WITHIN 1/8-INCH IN 10 FEET. STRAIGHTEN BY MECHANICAL MEANS WITHOUT DAMAGE TO THE ZINC COATING. ALL RAILING ASSEMBLY HARDWARE SHALL BE GALVANIZED PER THE STANDARD SPECIFICATIONS.

PAINT ALL STRUCTURAL STEEL RAILING COMPONENTS AFTER GALVANIZING AS SHOWN IN THE PLANS IN ACCORDANCE WITH THE SUPPLEMENTAL SPECIFICATION "CLEANING, SURFACE PREPARATION AND PAINTING OF GALVANIZED SURFACES". PAINT COLOR IS TO MATCH FEDERAL STANDARD NO. 595B COLOR NO. 27038 (BLACK). SUBMIT PAINT COLOR SAMPLE TO THE IOWA DEPARTMENT OF TRANSPORTATION, OFFICE OF BRIDGES AND STRUCTURES FOR APPROVAL PRIOR TO GALVANIZING AND PAINTING.

PROTECT ALL PAINTED SURFACES IMMEDIATELY AFTER PAINT HAS CURED. PROTECTION METHOD SHALL BE ADEQUATE TO PREVENT DAMAGE DURING STORAGE, HANDLING, SHIPPING TO THE INSTALLATION SITE, AND DURING THE INSTALLATION OF THE RAILING. DO NOT REMOVE THE PROTECTION UNTIL POTENTIAL DAMAGE TO THE PAINT IS LIMITED TO FINAL ASSEMBLY SURFACES ONLY. PERFORM TOUCH-UP REPAIR OF PAINT IN ACCORDANCE WITH THE SUPPLEMENTAL SPECIFICATION "CLEANING, SURFACE PREPARATION AND PAINTING OF GALVANIZED SURFACES". DO NOT PAINT ANCHORAGES OR FINAL INSTALLATION HARDWARE.

SUBMIT SHOP DRAWINGS OF ALL COMPONENTS OF THE RAILING FOR APPROVAL.

INCLUDE ALL COSTS ASSOCIATED WITH THE RAILING AND ANCHORAGES IN THE PRICE BID FOR "STRUCTURAL STEEL PEDESTRIAN HAND RAILING".

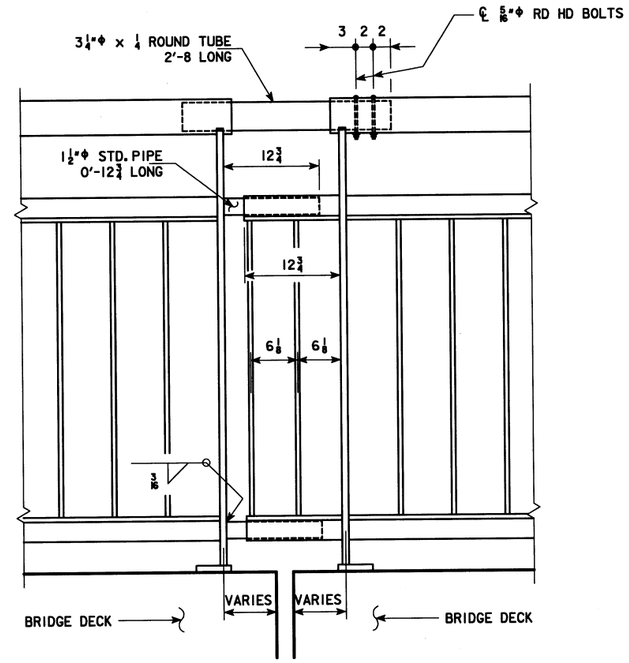

SIDEWALK RAILING EXPANSION JOINT DETAIL

RAILING MOCKUP NOTES

CONSTRUCT A MOCKUP RAILING PANEL FOR REVIEW BY THE ENGINEER. FOR THE PURPOSES OF THE MOCKUP, ONE SIDEWALK RAILING PANEL SHALL BE FABRICATED, GALVANIZED AND PAINTED ACCORDING TO THE REQUIREMENTS IN THESE PLANS. ACTUAL RAILING PRODUCTION MAY NOT PROCEED UNTIL FINAL APPROVAL OF THE MOCKUP. IF THE MOCKUP IS REJECTED, CONSTRUCT ANOTHER MOCKUP AT THE DIRECTION OF THE ENGINEER. USE MATERIALS AND METHODS TO CREATE THE MOCKUP(S) THAT ARE IDENTICAL TO THOSE PROPOSED FOR THE ACTUAL RAILINGS FOR THE PROJECT. THE APPROVED MOCKUP SHALL REMAIN AT THE PROJECT SITE FOR COMPARISON TO ACTUAL RAILINGS AS THEY ARE DELIVERED. PROTECT THE MOCKUP RAILING FROM WEATHER AND DAMAGE DURING STORAGE PERIOD. IF APPROVED FOR USE, INSTALL THE MOCKUP AS PART OF THE FINAL RAILING.

INCLUDE ALL COSTS ASSOCIATED WITH THE MOCKUP IN THE PRICE BID FOR "STRUCTURAL STEEL PEDESTRIAN HAND RAILING".

RAILING INSTALLATION NOTES

CONTRACTOR SHALL VERIFY DIMENSIONS OF THE CONCRETE PRIOR TO COMMENCING FINAL LAYOUT AND INSTALLATION OF RAILING. NOTIFY THE ENGINEER OF ANY DISCREPANCIES IN CONCRETE DIMENSIONS PRIOR TO RAILING INSTALLATION.

SET ALL RAILING PANELS NORMAL TO THE GRADE ALONG THE BRIDGE. SHIM BASE PLATES AS NECESSARY TO ALIGN PANELS AND TO SET PANELS PLUMB IN THE TRANSVERSE DIRECTION.

THE STUD CONCRETE ANCHORS SHALL BE GALVANIZED AND HAVE A MINIMUM PULLOUT STRENGTH OF 8,000 POUNDS BASED ON 4000 PSI CONCRETE. ANCHORS SHALL BE IN CONFORMANCE WITH MATERIALS I.M. 453.09.

CAULK FOR BASE PLATES SHALL BE LIGHT GREY NONSAG LATEX CAULK MARKETED FOR OUTDOOR USE. NO TESTING OR CERTIFICATION IS REQUIRED. DO NOT CONTAMINATE ADJACENT CONCRETE SURFACES WITH CAULK.

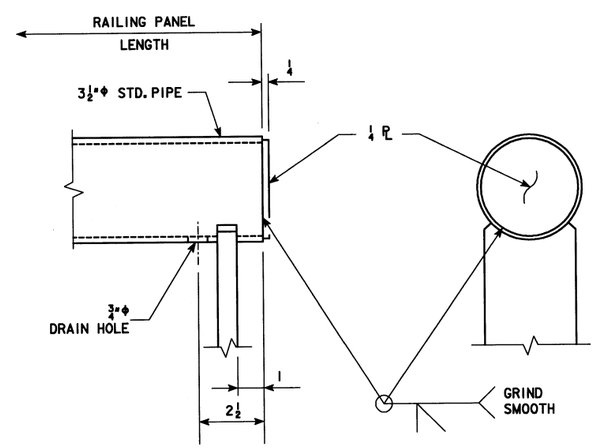

PIPE END CAP DETAILS

RAILING QUANTITY

ITEM	UNIT	QUANTITY
STRUCTURAL STEEL PEDESTRIAN HAND RAILING	LF	1187.5

DESIGN FOR REPAIRS TO

MULTISPAN CONTINUOUS WELDED PLATE GIRDER BRIDGE PLUS 90'-0 x 58'-0 CONCRETE SLAB BRIDGE

SIDEWALK RAILING DETAILS

STA. 212+21 TO 224+25 NOVEMBER, 2007

WEBSTER COUNTY

IOWA DEPARTMENT OF TRANSPORTATION - HIGHWAY DIVISION

DESIGN SHEET NO. 15 OF 19 FILE NO. 30163 DESIGN NO. 108

WHKS & CO.

ENGINEERS — PLANNERS — LAND SURVEYORS

MASON CITY, IA DUBUQUE, IA AMES, IA ROCHESTER, MN

DESIGN TEAM S.K.G. / J.J.O. / J.D.K./ M.A.F. | WEBSTER COUNTY | PROJECT NUMBER BRFN-926-0(9)--39-94 | SHEET NUMBER 16

2/1/2008 11:18:47 AM L:\dept\6\6400.21\Webster 108\drawings\FINAL\Extrusion Submittal\94926009.brg

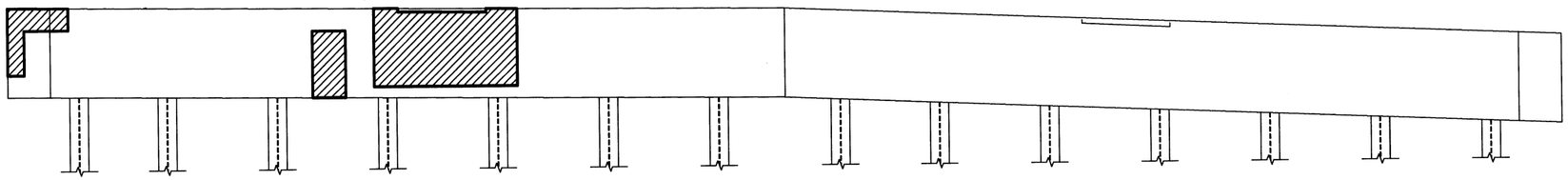

E. ABUT. SLAB BRIDGE - NEAR FACE
(LOOKING EAST)

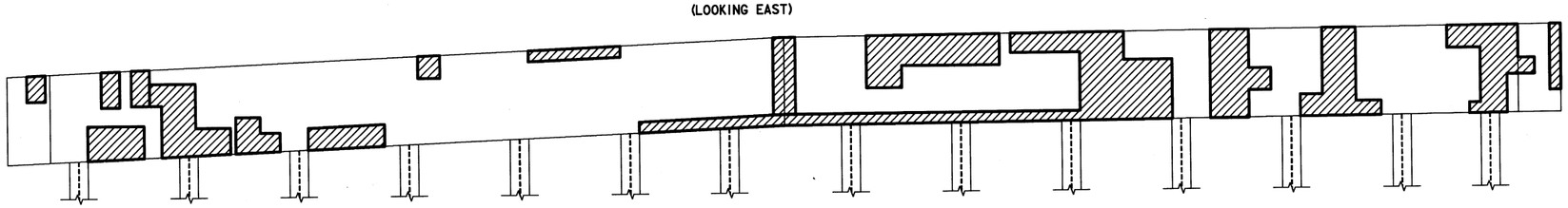

E. ABUT. SLAB BRIDGE - FAR FACE
(LOOKING WEST)

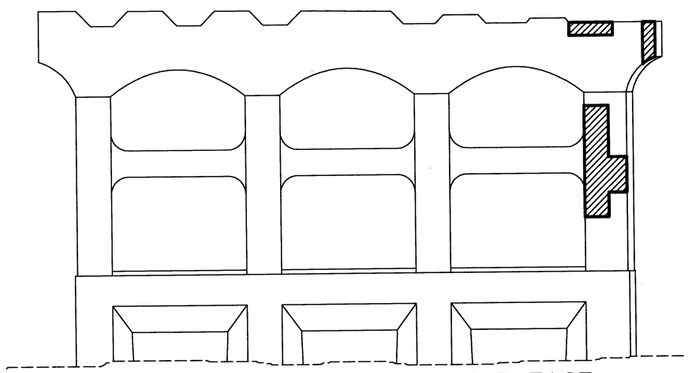

PIER 4W REPAIR AREAS - NEAR FACE
(LOOKING EAST)

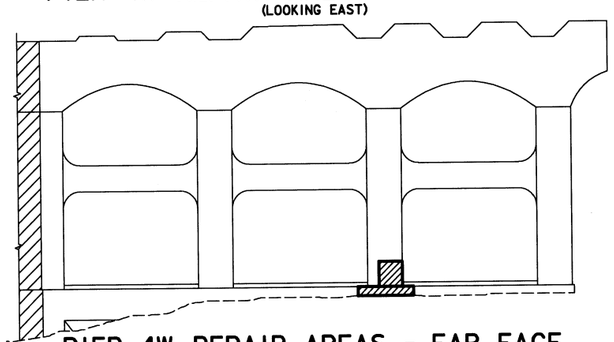

PIER 4W REPAIR AREAS - FAR FACE
(LOOKING WEST)

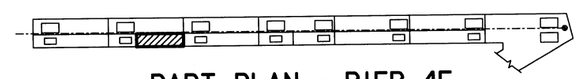

PART PLAN - PIER 4E

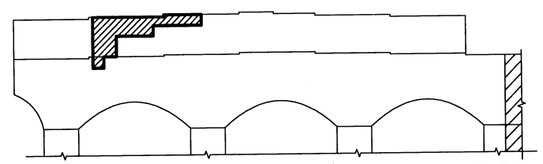

PIER 4E REPAIR AREAS - NEAR FACE
(LOOKING EAST)

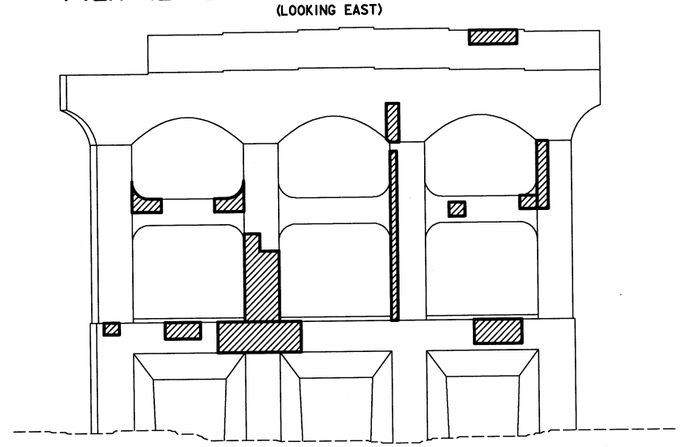

PIER 4E REPAIR AREAS - FAR FACE
(LOOKING WEST)

CONCRETE REPAIR QUANTITIES

TYPE	UNITS	QUANTITY
E. ABUT. SLAB BRIDGE	SQ. FT.	121.0
PIER 4W	SQ. FT.	72.0
PIER 4E	SQ. FT.	176.0
TOTAL (SQ. FT.)		369.0

ALL REPAIR AREAS ARE REGULAR CONCRETE REPAIR.

NOTE: REPAIR AREAS ARE APPROXIMATE. ACTUAL AREAS OF REPAIR SHALL BE DETERMINED IN THE FIELD BY THE ENGINEER AT THE TIME OF CONSTRUCTION.

DESIGN FOR REPAIRS TO

MULTISPAN CONTINUOUS WELDED PLATE GIRDER BRIDGE PLUS 90'-0 x 58'-0 CONCRETE SLAB BRIDGE PIER REPAIR DETAILS

STA. 212+21 TO 224+25 NOVEMBER, 2007

WEBSTER COUNTY

IOWA DEPARTMENT OF TRANSPORTATION - HIGHWAY DIVISION

DESIGN SHEET NO. 16 OF 19 FILE NO. 30163 DESIGN NO. 108

WHKS & CO.

ENGINEERING PLANNING LAND SURVEYORS

MASON CITY, IA DUBUQUE, IA AMES, IA ROCHESTER, MN

DESIGN TEAM S.K.G. / J.J.O. / J.D.K./ M.A.F.

WEBSTER COUNTY | PROJECT NUMBER BRFN-926-0(9)--39-94 | SHEET NUMBER 17

2/1/2008 11:18:54 AM L:\dept\6\6400.21\Webster 108\drawings\FINAL\Extrusion Submittal\94926009.brg

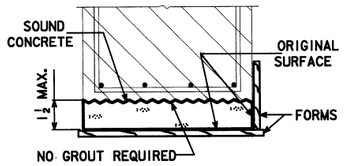

SHALLOW REPAIR BOTTOM SURFACE

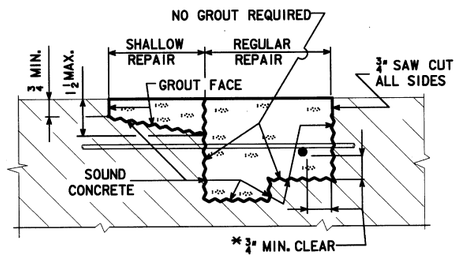

REPAIR DEFINITION

* INDICATES CLEARANCE FOR AN UN-BONDED REBAR.

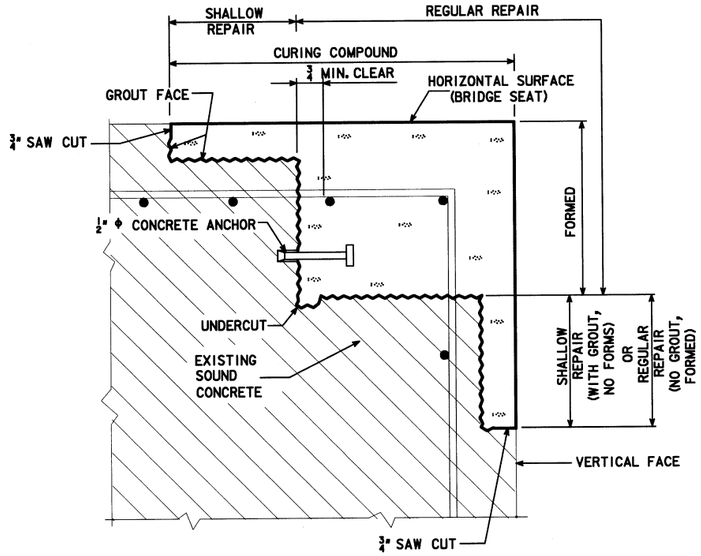

CORNER REPAIR

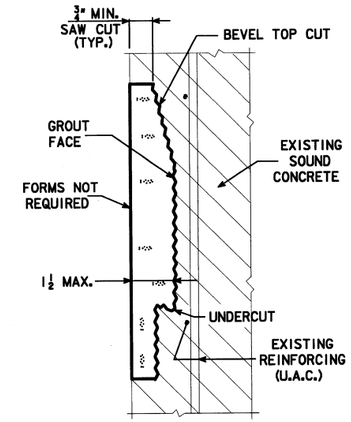

SHALLOW REPAIR VERTICAL FACE

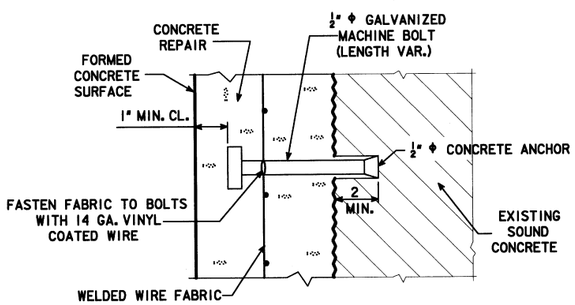

ANCHOR DETAIL

FOR SPACING AND USE OF CONCRETE ANCHORS AND WWF SEE THE STANDARD NOTES.

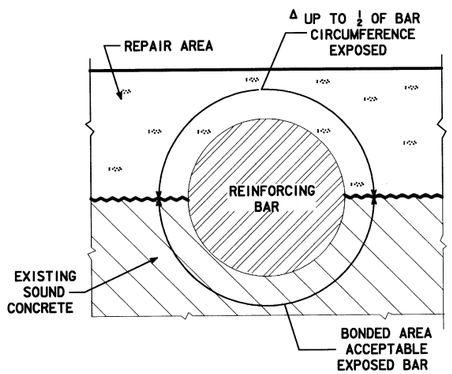

Δ IF MORE THAN ½ OF THE REBAR IS EXPOSED IT SHALL BE TREATED AS AN UN-BONDED REBAR.

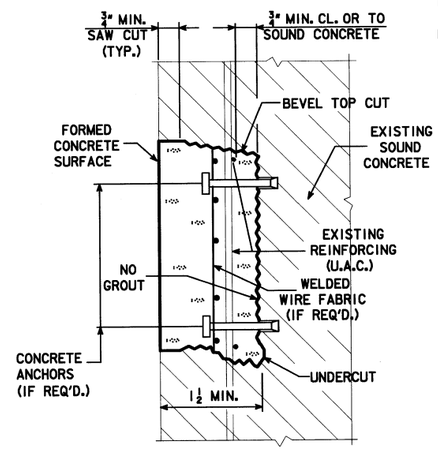

REGULAR REPAIR VERTICAL FACE

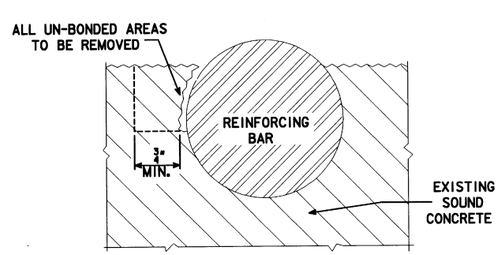

CONCRETE REMOVAL ADJACENT TO REINFORCING

STANDARD NOTES:

THE SPALLED AND HOLLOW AREAS OF THIS BRIDGE AS NOTED AND SHOWN IN THESE PLANS SHALL BE REPAIRED AS FOLLOWS:

ALL THE COSTS OF EQUIPMENT AND MATERIALS REQUIRED TO REPAIR THE SPALLED AND HOLLOW AREAS OF THIS BRIDGE SHALL BE INCLUDED IN THE PRICE BID FOR " CONCRETE REPAIR".

THE PRICE BID FOR "CONCRETE REPAIR" SHALL INCLUDE THE COST OF ALL CONCRETE ANCHORS AND MESH REQUIRED BY THE PLANS.

THE ENGINEER SHALL DETERMINE AND OUTLINE BY VISUAL AND AUDIBLE INSPECTION THE ACTUAL AREAS OF THE CONCRETE REPAIRS. THE CONTRACTOR SHALL BE PAID FOR THE ACTUAL AMOUNT OF REPAIRS MADE ON A SQUARE FOOT BASIS BASED ON THE PRICE BID PER SQUARE FOOT.

ALL EXISTING REINFORCING BARS THAT ARE EXPOSED BY CONCRETE REMOVAL SHALL BE CLEANED AND CAREFULLY INCORPORATED INTO THE NEW WORK, EXCEPT BADLY DETERIORATED EXISTING REINFORCING WHICH SHALL BE REPLACED AS DIRECTED BY THE ENGINEER.

THE CONCRETE ANCHORS REQUIRED SHALL HAVE A MINIMUM PULL OUT OF 5000 LBS. BASED ON 4000 PSI CONCRETE. AN ANCHOR MEETING THE REQUIREMENTS OF IOWA D.O.T. MATERIALS I.M. 453.09 AND THE PULL OUT LOAD ABOVE IS REQUIRED. THE ANCHORS SHALL BE GALVANIZED AND SHALL BE INSTALLED ACCORDING TO RECOMMENDATIONS OF THE MANUFACTURER. THE COST OF FURNISHING AND INSTALLING THE CONCRETE ANCHORS SHALL BE INCLUDED IN THE PRICE BID FOR "CONCRETE REPAIR".

THE WELDED WIRE FABRIC SHALL BE ASTM A185 AND GALVANIZED AS PER ASTM A-641. THE WWF WIRES SHALL BE SPACED 3 X 3 OR 4 X 4 AND THE WIRES SHALL HAVE A NOMINAL AREA OF 0.014 TO 0.029 SQUARE INCHES INCLUSIVE, EXAMPLE "WWF 3 X 3 - W1.4 X W2.9".

WHERE REINFORCEMENT HAS BEEN EXPOSED AND CLEARANCE AROUND THE PERIPHERY OF THE EXISTING BAR IS PROVIDED NO SUPPLEMENTAL REINFORCING IS REQUIRED, EXCEPT WHERE EXISTING REINFORCEMENT DENSITY AND PATTERN ARE SUCH THAT INDIVIDUAL OPEN SPACES BETWEEN BARS ARE OF 1.5 SQUARE FOOT OR LARGER. FOR THIS CONDITION ½ Φ CONCRETE ANCHORS AND WELDED WIRE FABRIC SHALL BE INSTALLED AT THE RATE OF ONE CONCRETE ANCHOR WITH WWF PER EACH 1.5 SQUARE FEET OF AREA WITHIN EACH OPEN SPACE.

SEE "STRUCTURAL CONCRETE REPAIR" IN CURRENT STANDARD SPECIFICATIONS FOR MORE INFORMATION CONCERNING THIS WORK.

CONCRETE PLACEMENT QUANTITIES

MARK	TYPE	UNITS	QUANTITY
1	SHALLOW REPAIR	SQ. FT.	315.0
2	REGULAR REPAIR	SQ. FT.	556.0
	TOTAL (SQ. FT.)		999.46 ~~871.0~~

1 INCLUDES 11.0 S.F. OF REPAIR AT VARIOUS LOCATIONS ALONG THE NORTH CURB FACE AND 304.0 S.F. OF REPAIR AT VARIOUS LOCATIONS ALONG THE MEDIAN FACES. SEE GENERAL NOTES AND SITUATION PLAN, DESIGN SHEETS 1 & 2, FOR DESCRIPTION AND GENERAL LOCATION OF REPAIR.

2 INCLUDES 187.0 S.F. OF REPAIR AT VARIOUS LOCATIONS ALONG THE TOP AND NORTH FACE OF MEDIAN. SEE GENERAL NOTES AND SITUATION PLAN, DESIGN SHEETS 1 & 2, FOR DESCRIPTION AND GENERAL LOCATION OF REPAIR. INCLUDES 369.0 S.F. OF REPAIR TO E. ABUTMENT AND PIER 4. SEE DESIGN SHEET 16 FOR LOCATION OF REPAIR AREAS.

ESTIMATED CONCRETE REPAIR QUANTITIES

DESCRIPTION	UNITS	AMOUNT
CONCRETE REPAIR	SQ. FT.	~~871.0~~

DESIGN FOR REPAIRS TO

MULTISPAN CONTINUOUS WELDED PLATE GIRDER BRIDGE PLUS 90'-0 x 58'-0 CONCRETE SLAB BRIDGE CONCRETE REPAIR

STA. 212+21 TO 224+25 NOVEMBER, 2007

WEBSTER COUNTY

IOWA DEPARTMENT OF TRANSPORTATION - HIGHWAY DIVISION

DESIGN SHEET NO. 17 OF 19 FILE NO. 30163 DESIGN NO. 108

REVISED: MINOR CHANGES MADE IN "STANDARD NOTES". TAPE NO. 19, DATED 11-9-92.
ENGLISH\REPAIRRETROFITBRIDGES.DGN 1045 - THIS SHEET REDRAWN 9-27-90.

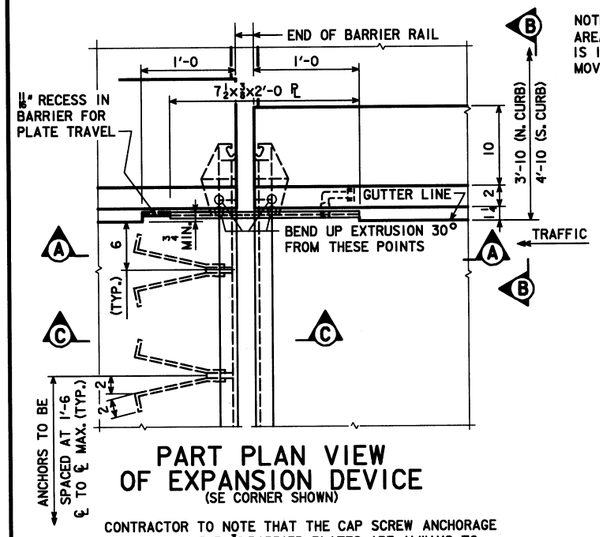

PART PLAN VIEW OF EXPANSION DEVICE
(SE CORNER SHOWN)

CONTRACTOR TO NOTE THAT THE CAP SCREW ANCHORAGE SYSTEM FOR THE ⅜" BARRIER PLATES ARE ALWAYS TO BE PLACED ON THE ONCOMING TRAFFIC SIDE.

NOTE: IT IS INTENDED THAT THE 11/16 INCH RECESSED AREA BE FORMED SO THAT WHEN THE ⅜" BENT PLATE IS INSTALLED THE PLATE WILL BE ABLE TO MOVE FREELY IN THIS RECESSED AREA.

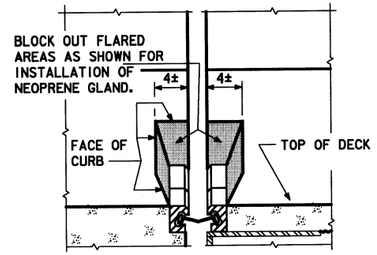

BLOCKOUT DETAIL

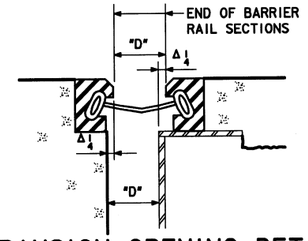

EXPANSION OPENING DETAIL

THIS DIMENSION MAY VARY SLIGHTLY DEPENDING ON MANUFACTURER FURNISHING THE JOINT.

NOTE:
SEE DESIGN SHEET 19 FOR STEEL EXTRUSION NOTES, NEOPRENE GLAND NOTES, AND WATERTIGHT INTEGRITY TESTING, AND REPAIR NOTES.

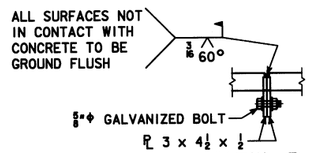

VIEW D-D

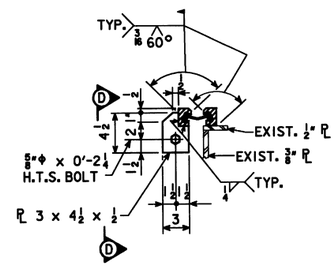

EXTRUSION FIELD SPLICE DETAIL

NOTE: JOINT SETTINGS FOR OTHER TEMPERATURES ARE PROPORTIONAL. TEMPERATURES SHOWN ARE CONCRETE DECK TEMPERATURES ON THE UNDERSIDE OR SHADED PORTION OF THE DECK.

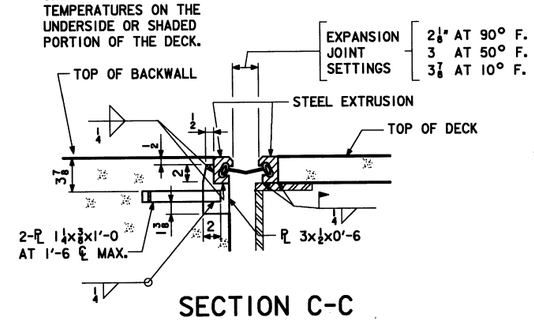

SECTION C-C

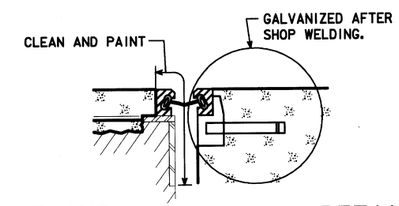

PAINT AND GALVANIZING DETAILS

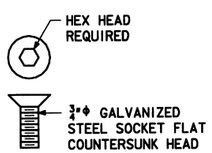

SOCKET FLAT COUNTERSUNK HEAD CAP SCREW DETAIL

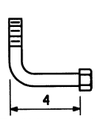

BENT BOLT DETAIL

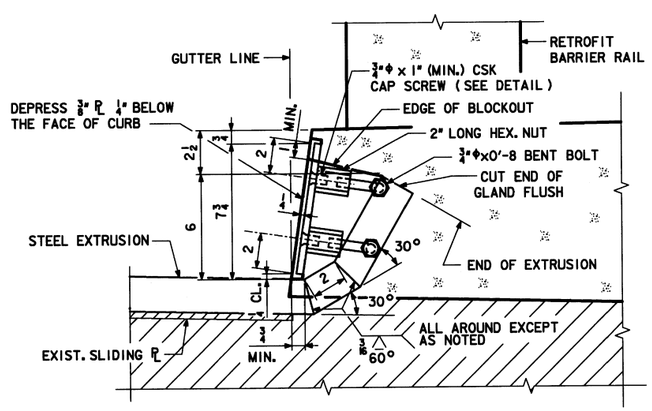

SECTION B-B

CURB PLATE NOTE:

THE MATERIAL USED FOR THE CURB PLATES IS TO BE ASTM A-36 STEEL. THE BOLTS SHALL MEET THE REQUIREMENTS OF ASTM A-307. THE PLATES, BOLTS, NUTS AND CAP SCREWS ARE TO BE GALVANIZED IN ACCORDANCE WITH ARTICLE 4100.07 OF THE STANDARD SPECIFICATIONS.

THIS PORTION OF THE ⅜" BENT PLATE IS TO BE PAINTED WITH A COLORLESS OIL, OR SOME OTHER SATISFACTORY MEANS TO PREVENT CONCRETE FROM ADHERING TO THE PLATE SO THAT THE PLATE CAN BE REMOVED IF NECESSARY. (TYP. ALL ⅜" BENT PLATES)

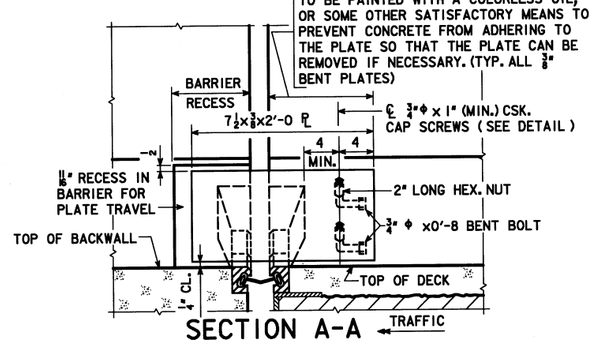

SECTION A-A

TABLE OF APPROVED EXPANSION DEVICES		
MANUFACTURER	TYPE OF STEEL EXTRUSION	NEOPRENE GLAND
WATSON-BOWMAN & ACME CORP.	E	SE-500
D.S. BROWN CO.	SSE2	A2R-400
APPROVED EQUAL		

DESIGN FOR REPAIRS TO

MULTISPAN CONTINUOUS WELDED PLATE GIRDER BRIDGE PLUS 90'-0 x 58'-0 CONCRETE SLAB BRIDGE EXPANSION DEVICE DETAILS

STA. 212+21 TO 224+25 NOVEMBER, 2007

WEBSTER COUNTY

IOWA DEPARTMENT OF TRANSPORTATION - HIGHWAY DIVISION

DESIGN SHEET NO. 18 OF 19 FILE NO. 30163 DESIGN NO. 108

CORRECTION 05-04 - BLOCKOUT DETAIL MOVED INSIDE OF BORDER. PART PLAN R.A. MOVED OUTSIDE OF BORDER.
ENGLISHDECKRAILBRIDGES.DGN 1026 - THIS SHEET ISSUED 03-02.

DESIGN TEAM S.K.G. / J.J.O. / J.D.K./ M.A.F.	F-SHAPE EXPANSION DEVICE DETAILS STEEL EXTRUSION WITH NEOPRENE GLAND	STANDARD SHEET 1026 (MODIFIED)	WEBSTER COUNTY	PROJECT NUMBER BRFN-926-0(9)--39-94	SHEET NUMBER 19

STEEL EXTRUSION NOTES:

THE CONTRACTOR SHALL SUBMIT FOR APPROVAL SHOP DRAWINGS OF THE EXPANSION DEVICES SHOWING LAYOUT, MATERIAL TO BE USED, AND PROVISIONS FOR HOLDING DEVICE DURING PLACEMENT OF CONCRETE.

THE EXPANSION DEVICE SHALL BE GALVANIZED AFTER WELDING.

THE EXPANSION DEVICE IS TO BE PARALLEL TO GRADE.

CAP SCREWS SHALL BE COUNTERSUNK $\frac{1}{16}$" BELOW TOP OF THE PLATE.

THE MINIMUM GRADE OF STRUCTURAL STEEL FOR THE EXPANSION DEVICE SHALL BE ASTM A-36.

BLOCKOUT DETAILS MAY BE ALTERED FROM THOSE SHOWN PROVIDED THE GLAND MAY BE INSTALLED AND REMOVED IF NECESSARY AND IF CURB AREA REMAINS WATERTIGHT.

SHOP AND OR FIELD SPLICES OF THE STEEL EXTRUSION WILL BE PERMITTED. PIECES OF STEEL EXTRUSION IN THE 11 FT. TO 18 FT. RANGE SHALL BE USED TO FORM THE REQUIRED GUTTER TO GUTTER LENGTH. THE INDIVIDUAL LENGTH OF PIECES SHALL BE CHOSEN SO THAT A MINIMUM NUMBER OF SPLICES IS REQUIRED. ALL PIECES SHALL BE JOINED WITH A PREQUALIFIED PARTIAL PENETRATION SINGLE GROOVE WELD, AND ALL SURFACES NOT IN CONTACT WITH CONCRETE ARE TO BE GROUND FLUSH. NO WELD SHALL BE PERMITTED IN THE INTERNAL SECTION OF THE EXTRUSION WHERE THE NEOPRENE GLAND IS TO BE LOCATED.

THE NUMBER OF FEET OF STEEL EXTRUSION INSTALLED SHALL BE PAID FOR AT THE CONTRACT PRICE PER FOOT BASED ON PLAN QUANTITIES. THE PRICE BID FOR "STEEL EXTRUSION JOINT W/NEOPRENE" SHALL INCLUDE THE COST OF FURNISHING BUT NOT THE COST OF INSTALLING THE NEOPRENE GLAND. THE CONTRACT PRICE BID FOR "STEEL EXTRUSION JOINT W/NEOPRENE" SHALL BE FULL COMPENSATION FOR FURNISHING AND INSTALLING STEEL EXTRUSIONS. THIS WORK WILL CONSIST OF FURNISHING ALL REQUIRED MATERIALS, (INCLUDING THE $\frac{3}{8}$" PLATES AT THE CURBS AND THEIR ANCHORAGE SYSTEMS), AND THE INSTALLATION AND ADJUSTMENT OF THE EXPANSION JOINTS IN ACCORDANCE WITH THE DETAILS SHOWN ON THE PLANS AND AS DIRECTED BY THE ENGINEER. THE FURNISHING AND INSTALLATION OF ALL NECESSARY HARDWARE AND ACCESSORIES AS SUPPLIED BY THE EXPANSION JOINT MANUFACTURER ARE TO BE INCLUDED IN THIS WORK, INCLUDING THE ANCHORAGE SYSTEM AND ANY TEMPORARY ERECTION MATERIAL. ALL WORK AND MATERIALS FOR THE INSTALLATION OF THE EXPANSION JOINTS ARE TO COMPLY WITH THE WRITTEN RECOMMENDATIONS OF THE EXPANSION JOINT MANUFACTURER.

NEOPRENE GLAND NOTES:

THE NEOPRENE GLAND IS TO BE PLACED AS ONE CONTINUOUS PIECE FROM END TO END OF THE STEEL EXTRUSIONS.

THE NEOPRENE GLAND SHALL CONFORM TO ASTM D-2628 MODIFIED TO EXCLUDE RECOVERY TESTS AND COMPRESSION SET.

THE CONTRACTOR SHALL INSTALL THE GLAND ONLY WHEN THE DECK TEMPERATURE IS BETWEEN 40°F AND MAXIMUM INSTALLATION TEMPERATURE SHOWN IN THESE PLANS INCLUSIVE. THE DECK TEMPERATURE SHALL BE MEASURED BY RECORDING THE SURFACE TEMPERATURES ON THE UNDERSIDE OF THE DECK ADJACENT TO THE JOINTS. IF THE DECK TEMPERATURE DOES NOT FALL WITHIN THE SPECIFIED RANGE BEFORE THE CONTRACTOR HAS COMPLETED ALL OTHER REQUIRED WORK, IT WILL BE NECESSARY FOR THE CONTRACTOR TO RETURN TO THE PROJECT SITE TO COMPLETE INSTALLATION AND TESTING OF THE NEOPRENE GLAND.

THE NUMBER OF FEET OF NEOPRENE GLAND INSTALLED SHALL BE PAID FOR AT THE CONTRACT PRICE PER FOOT BASED ON PLAN QUANTITIES. THE PRICE FOR "NEOPRENE GLAND INSTALLATION AND TESTING" SHALL BE FULL COMPENSATION FOR INSTALLING AND TESTING OF THE NEW NEOPRENE GLAND. THIS WORK WILL CONSIST OF CLEANING THE EXTRUSION, INSTALLATION OF THE NEOPRENE GLAND AND WATER TIGHT TESTING OF THE EXPANSION JOINT SYSTEM. ALL WORK AND MATERIALS NECESSARY FOR THE INSTALLATION OF THE NEOPRENE GLAND SHALL COMPLY WITH THE RECOMMENDATIONS OF THE EXPANSION JOINT MANUFACTURER. THE PRICE BID FOR "NEOPRENE GLAND INSTALLATION AND TESTING" SHALL INCLUDE ALL WATERTIGHT INTEGRITY TESTING, LEAK REPAIRS AS DIRECTED BY THE ENGINEER, AND SUBSEQUENT WATERTIGHT TESTING UNTIL A LEAK FREE INSTALLATION IS ACHIEVED.

IF THE CONTRACTOR IS REQUIRED TO RETURN TO THE PROJECT SITE AFTER ALL OTHER REQUIRED WORK HAS BEEN COMPLETED, THE CONTRACTOR SHALL COMPLETE INSTALLATION AND TESTING OF NEOPRENE GLAND AT NO EXTRA CHARGE TO THE STATE.

WATERTIGHT INTEGRITY TESTING AND REPAIR NOTES:

AFTER INSTALLATION OF EACH NEOPRENE GLAND, THE CONTRACTOR SHALL PERFORM WATERTIGHT INTEGRITY TESTS AT THE DECK LEVEL TO DETECT ANY LEAKAGE. THE TESTS ARE TO CHECK FOR LEAKAGE AT THE UPTURNED ENDS OF THE EXPANSION DEVICE AND FOR LEAKAGE ALONG THE EXPANSION DEVICE ACROSS THE DECK AND ANY MEDIANS OR SIDEWALKS. THE CONTRACTOR MAY CONDUCT A SINGLE TEST OF THE ENTIRE DEVICE INCLUDING UPTURNED ENDS OR MAY CONDUCT SEPARATE TESTS OF UPTURNED ENDS AND ONE OR MORE TESTS OF OVERLAPPING LENGTHS BETWEEN THE UPTURNED ENDS.

AT EACH UPTURNED END OF THE EXPANSION DEVICE, THE CONTRACTOR SHALL BLOCK OUT ON THE DECK AT LEAST 3 FEET OF THE EXPANSION DEVICE LEADING TO THE UPTURNED END AND FLOOD THE AREA. A MINIMUM WATER DEPTH OF 3" SHALL BE MAINTAINED AT THE GUTTERLINE FOR AT LEAST 30 MINUTES. DURING THE TEST, THE INSPECTOR SHALL OBSERVE FOR ANY OVERFLOW AT THE UPTURNED END. AT THE CONCLUSION OF THE TEST THE INSPECTOR WILL EXAMINE THE UNDERSIDE OF THE JOINT FOR LEAKAGE. THE EXPANSION DEVICE IS CONSIDERED WATERTIGHT IF THE INSPECTOR OBSERVES NO OVERFLOW DURING THE TEST AND IF NO WETNESS IS VISIBLE ON THE INSPECTOR'S FINGER AFTER TOUCHING A NUMBER OF UNDERDECK AREAS NEAR THE UPTURNED END.

THE CONTRACTOR SHALL TEST THE EXPANSION DEVICE BETWEEN UPTURNED ENDS BY BLOCKING OUT AND COVERING THE DEVICE WITH PONDED OR FLOWING WATER TO A DEPTH OF AT LEAST 1" AT ALL POINTS, FOR AT LEAST 30 MINUTES. VERTICAL CURB SURFACES MAY BE TESTED WITH AN UNNOZZLED HOSE DELIVERING APPROXIMATELY ONE GALLON PER MINUTE DIRECTED TO FLOW OVER THE ENTIRE CURB HEIGHT FOR 30 MINUTES. AT THE CONCLUSION OF THE TEST, THE INSPECTOR WILL EXAMINE THE UNDERSIDE OF THE JOINT FOR LEAKAGE. THE EXPANSION DEVICE IS CONSIDERED WATERTIGHT IF NO WETNESS IS VISIBLE ON THE INSPECTOR'S FINGER AFTER TOUCHING A NUMBER OF UNDERDECK AREAS. DAMP CONCRETE THAT DOES NOT IMPART WETNESS TO THE FINGER IS NOT CONSIDERED A SIGN OF LEAKAGE.

IF THE EXPANSION DEVICE LEAKS AT AN UPTURNED END OR ALONG ITS LENGTH, THE CONTRACTOR SHALL LOCATE THE LEAK(S) AND TAKE REPAIR MEASURES TO STOP THE LEAKAGE. THE REPAIR MEASURES SHALL BE AS RECOMMENDED BY THE MANUFACTURER AND APPROVED BY THE ENGINEER PRIOR TO BEGINNING CORRECTIVE WORK.

IF MEASURES TO ELIMINATE LEAKAGE ARE TAKEN, THE CONTRACTOR SHALL PERFORM SUBSEQUENT WATERTIGHT INTEGRITY TESTS SUBJECT TO THE SAME CONDITIONS AS THE ORIGINAL TEST.

WHKS & CO.
ENGINEERS — PLANNERS — LAND SURVEYORS
MASON CITY, IA — DUBUQUE, IA — AMES, IA — ROCHESTER, MN

DESIGN FOR REPAIRS TO
MULTISPAN CONTINUOUS WELDED PLATE GIRDER BRIDGE PLUS 90'-0 x 58'-0 CONCRETE SLAB BRIDGE
EXPANSION DEVICE NOTES
STA. 212+21 TO 224+25 NOVEMBER, 2007
WEBSTER COUNTY
IOWA DEPARTMENT OF TRANSPORTATION - HIGHWAY DIVISION
DESIGN SHEET NO. 19 OF 19 FILE NO. 30163 DESIGN NO. 108

DESIGN TEAM S.K.G. / J.J.O. / J.D.K./ M.A.F. | WEBSTER COUNTY | PROJECT NUMBER BRFN-926-0(9)--39-94 | SHEET NUMBER 20

ESTIMATED ROADWAY QUANTITIES

100-0A
10-28-97

ITEM NO.	ITEM CODE	ITEM	UNIT	TOTAL	AS BUILT QUAN.
21	2102-2625000	EMBANKMENT-IN-PLACE	CY	379	379
22	2102-2710070	EXCAVATION, CLASS 10, ROADWAY AND BORROW	CY	51	51
23	2213-6745500	REMOVAL OF CURB	STA	7.00	7.00
24	2213-8202080	BASE WIDENING, 8 IN. PORTLAND CEMENT CONCRETE	SY	117	117
25	2301-0690200	BRIDGE APPROACH, RK-20	SY	~~846~~	853.8
26	2412-0000100	LONGITUDINAL GROOVING IN CONCRETE	SY	6696	6696
27	2505-4008100	REMOVAL OF GUARDRAIL	LF	125	125
28	2505-4008200	INSTALLATION OF GUARDRAIL	LF	200	200
29	2505-4021690	GUARDRAIL, END ANCHORAGE, BEAM, RE-69	EACH	2	2
30	2505-4021762	GUARDRAIL TERMINAL, BEAM, FLARED, RE-76	EACH	2	2
31	2510-6745850	REMOVAL OF PAVEMENT	SY	862.1	862.1
32	2520-3350015	FIELD OFFICE	EA	1	1
33	2527-9263109	PAINTED PAVEMENT MARKING, WATERBORNE OR SOLVENT-BASED	STA	~~41.39~~	93.638
34	2527-9263180	PAVEMENT MARKINGS REMOVED	STA	~~7.00~~	0
35	2528-8445110	TRAFFIC CONTROL	LS	1	1
36	2602-0000020	SILT FENCE	LF	~~150~~	0

SEE SHEET 43 FOR WORK ORDERS

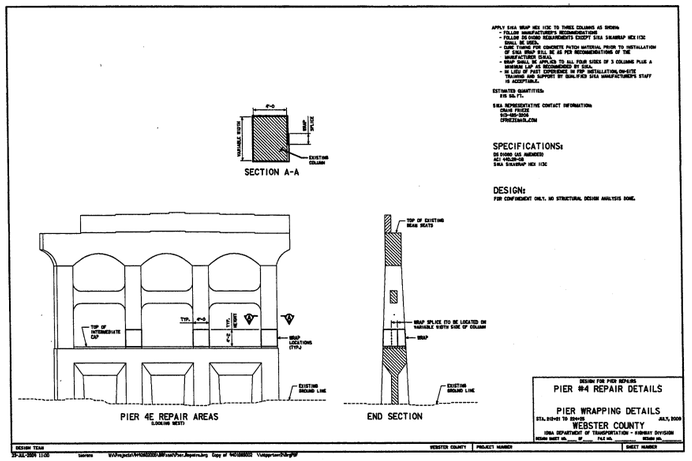

ESTIMATE REFERENCE INFORMATION

100-4A
10-29-02

Item No.	Item Code	Description
1	2102-2625000	EMBANKMENT-IN-PLACE Approved material shall be obtained by the contractor from outside of the existing right of way. Quantity is for regrading at guardrail locations. See Tab. 107-23, on Sheet 24.
2	2102-2710070	EXCAVATION, CLASS 10, ROADWAY AND BORROW Item is for traffic crossover and paved median west of the bridge. See Sheet 26 for locations.
3	2213-6745500	REMOVAL OF CURB See Tab. 110-4, on Sheet 25.
4	2213-8202080	BASE WIDENING, 8IN. PORTLAND CEMENT CONCRETE See Tab. 106-5, on Sheet 25.
5	2301-0690200	BRIDGE APPROACH, RK-20 See Tab. 112-6, on Sheet 24.
6	2412-0000100	LONGITUDINAL GROOVING IN CONCRETE See Tab. 100-28, on Sheet 24.
7	2505-4008100	REMOVAL OF GUARDRAIL See Tab. 110-7A, Sheet No. 24.
8 9 10	2505-4008200 2505-4021690 2505-4021762	INSTALLATION OF GUARDRAIL GUARDRAIL, END ANCHORAGE, BEAM, RE-69 GUARDRAIL TERMINAL, BEAM, FLARED, RE-76 See Tab. 108-8A, Sheet No. 24.
11	2510-6745850	REMOVAL OF PAVEMENT See Tab. 110-1, Sheet No. 25.
12	2520-3350015	FIELD OFFICE
13	2527-9263109	PAINTED PAVEMENT MARKING, WATERBORNE OR SOLVENT-BASED See Tab. 108-22, on Sheet 25.
14	2527-9263180	PAVEMENT MARKINGS REMOVED See Tab. 108-22, on Sheet 25.
15	2528-8445110	TRAFFIC CONTROL See Tab. 108-23 and Tab. 108-26, on Sheet 22. See Sheet 27 for Restricted Width Signing.
16	2602-0000020	SILT FENCE Silt fence shall be used to protect and restore areas disturbed by necessary construction activities, as directed by the Engineer. Item includes 150 linear feet (nominal) at the east approach end of the bridge. The Engineer shall adjust the locations to fit field conditions.

LICENSED PROFESSIONAL ENGINEER
BRIAN J. BIRKLAND
17375
IOWA

I hereby certify that this plan was prepared by me or under my direct personal supervision and that I am a duly licensed Professional Engineer under the laws of the State of Iowa.

Brian J. Birkland — 1-31-08
Signature — Date

Brian J. Birkland
Printed or Typed Name

My license renewal date is December 31, 2008

Pages or sheets covered by this seal: 21-27, 43-50

DES. NO. 108
FILE NO. 30163

DESIGN TEAM	WHKS & CO.	ENGLISH	IOWA DOT * OFFICE OF DESIGN	WEBSTER	COUNTY	PROJECT NUMBER	BRFN-926-0(9)--39-94	SHEET NUMBER	21

04-03-01 203-2

During construction of this project, the contractor will be required to coordinate his operations with those of other contractors working within the same area. Other work in progress during the same period of the time will include construction of the following projects:

Project	Type of Work

01-20-84 204-2

All holes resulting from operations of the contractor, including removal of guardrail posts, fence posts, utility poles, or foundation studies, shall be filled and consolidated to finished grade as directed by the engineer to prevent future settlement. The voids shall be filled as soon as practical - preferably the day created and not later than the following day. Any portion of the right-of-way or project limits (including borrow areas and operation sites) disturbed by any such operations shall be restored to an acceptable condition. This operation shall be considered incidental to other bid items in project.

10-22-93 204-4

All guardrail materials that are removed and not reused on this project shall become the property of the contractor. Any material to be used on this project that is damaged due to the carelessness of the contractor shall be replaced at the contractor's expense without cost to the State of Iowa.

10-16-07 213-1

It shall be the contractor's responsibility to provide waste areas or disposal sites for excess material (excavated material or broken concrete) which is not desirable to be incorporated into the work involved on this project. These areas shall not impact cultural resources, wetlands or "Waters of the U.S." U.S. Army Corps of Engineers' (COE) regulations prohibit placement of material on stream banks below the "ordinary high water mark" without an approved COE 404 Permit.

When a disposal site is selected outside of the project limits, it is recommended that the contractor contact the Office of the State Archaeologist (OSA) and State Historic Preservation Office (SHPO) to request an historic site search and a recommendation of suitability for the purpose intended. If OSA or SHPO are contacted, provide a copy of their response to the contracting authority and the Office of Location and Environment.

No payment for overhaul will be allowed for material hauled to these sites. No material shall be placed within the right-of-way, unless specifically stated in the plans.

01-20-84 232-5

The contractor shall not disturb desirable grass areas and desirable trees outside the construction limits. The contractor will not be permitted to park or service vehicles and equipment or use these areas for storage of materials. Storage, parking and service area(s) will be subject to the approval of the resident engineer.

06-07-94 232-8

The top six (6) inches of the disturbed areas shall be free of rock and debris and shall be suitable for the establishment of vegetation, subject to the approval of the Engineer.

04-30-02 213-7

Unless otherwise directed or authorized, all hot mix asphalt and other bituminous materials which are not specifically addressed or described in the contract documents shall become the property of the contractor.

The contractor, in accordance with current rules and regulations of the Iowa Department of Natural Resources, may:

1. With the approval of the Engineer, blend or otherwise process the material for use with shoulder or special backfill aggregate, for use on the project.
2. With the approval of the Engineer, place with material in areas designated by the Engineer as Soil Aggregate Subbase without extra charge.
3. Remove the material from the project and stockpile for the contractor's future use.

01-20-84 221-3

Estimated quantity for new concrete pavement includes all integral curb, all street returns and special areas of repairs to connecting pavements.

01-20-84 221-4

In order to avoid any unnecessary surface breaks or premature spalling, the contractor is cautioned to exercise extreme care when performing any of the necessary saw cutting operations for the proposed pavement removal.

04-17-07 232-3A

EROSION CONTROL: (Rural Seeding)

Following completion of work on this project, all disturbed areas shall be seeded, fertilized, and mulched.

SEEDING:
3 lbs. of Fescue or Fawn per 1000 sq. ft.

FERTILIZER:
17 lbs. of 13-13-13 (or equivalent) commercial fertilizer per 1000 sq. ft.

MULCH:
70 lbs. of dry cereal straw per 1000 sq. ft. All mulch to be consolidated into the soil with a mulch stabilizer.

The preparation of the seedbed, furnishing and application of seed, fertilizing, and mulching shall be considered incidental to work on this project and no extra compensation will be allowed.

10-28-97 232-10

The contractor is expected to have materials, equipment, and labor available on a daily basis to install and maintain erosion control features on the project. This may involve seeding, silt fence, rock ditch checks, silt basins, or silt dikes.

STAGING NOTES

108-26
08-30-88

Stage 1 - Westbound Lane Closure
Stage 2 - Eastbound Lane Closure

Contractor shall stage construction to minimize inconvenience to traffic, maximize use and preservation of existing pavement, and improve coordination among projects within the corridor.

Situations may arise which preclude adhering to the original construction sequence or which, in the opinion of the Contractor, would readily lend themselves to more efficient staging operations. Should the Contractor desire to deviate from the original plan, an alternate plan shall be submitted to the Engineer for review and approval.

06-22-84 251-2

The contractor is hereby notified that removal of any existing traffic markers, warning devices or guardrail barriers shall be scheduled subject to the approval of the Engineer. The contractor may be required to place temporary warning devices at certain locations where replacement features are not installed the same day during which any such removals take place.

W-1

Where public utility fixtures are shown as existing on the plans or encountered withing the construction area, it shall be the responsibility of the contractor to notify the owners of those utilities prior to the beginning of any construction. The contractor shall afford access to these facilities for necessary modification of services. Underground facilities, structures and utilities have been plotted from available surveys and records, and therefore their locations must be considered approximate only. It is possible there may be others, the existence of which is presently not known or shown. It is the contractor's responsibility to determine their existence and exact location and to avoid damage thereto. No claims for additional compensation will be allowed to the contractor for any interference or delay caused by such work.

10-18-05 262-6

This project is NOT a POINT 25 project and is not subject to the provisions of IAC 761-115.25.

TRAFFIC CONTROL PLAN

108-23
04-04-89

1 Through traffic will be maintained on the project at all times.

2 Traffic control on this project shall be in accordance with Standard Road Plans. For additional complementary information, refer to Part 6 of the Manual on Uniform Traffic Control Devices and the current Standard Specifications.

3 The contractor shall coordinate traffic control with the Webster 208 bridge repair project and other projects in the area.

4 Traffic Control west of Webster 108 shall be in accordance with TC-423.

5 The Webster 108 traffic control posted regulatory speed shall be 35 mph.

6 Contractor to maintain access to individual homes and businesses at all times.

7 See Sheet 27 for Restricted Width Signing.

STANDARD ROAD PLANS

105-4
10-16-07

The following Standard Road Plans shall be considered applicable to construction work on this project.

Number	Date	Sheets	Title
RA-41	04-19-05	1	Curb Intake (Under Pavement)
RC-17	10-19-04	2	Silt Fence
RD-64	10-16-07		Restricted Width Signs (Two-Lane Roadway)
RE-2B	04-03-01	1	Formed Steel Beam Railing Transition and Terminal Sections (Thrie Beam)
RE-7	04-15-03	1	Delineators and Object Markers
RE-12A	10-19-04	1	Formed Steel Beam Guardrail and Posts for Blocked-Out Guardrail (W-Beam)
RE-12B	10-19-04	1	Formed Steel Beam Guardrail and Posts for Blocked-Out Guardrail (Thrie-Beam)
RE-12C	10-19-04	1	Steel Guardrail Post and Wood Blockouts
RE-47	04-17-07	1	Type 3 Object Marker
RE-48A	10-19-04	1	Details of Marker and Delineator Placement (at Bridges)
RE-64B	04-19-05	1	Guardrail Installation (Bridge Ends) (Less Than Full Shoulder Width Bridge)
RE-68	10-19-04	1	Steel Beam Guardrail Standard Transition Section (STS)
RE-69B	10-16-07	1	Guardrail Installation Connection to Retrofit Bridge Endpost
RE-76	10-16-07	1	Guardrail Terminal (FLEAT-350)
RF-19C	10-18-05	1	Subdrains (Longitudinal)
RF-19E	10-16-07	1	Outlets for Longitudinal, Transverse and Backslope Subdrains
RG-1	09-21-99	1	P.C. Concrete Pavement Widening
RH-50	04-17-07	1	Joints (Transverse Contraction)
RH-51	10-17-06	1	Joints (Longitudinal Contraction)
RH-52	04-17-07	1	Joints (Expansion)
RK-20	10-16-07	3	Double Reinforced 12" Approach
RK-23	10-17-06	1	Bridge Approach (Multi-Lane, Curbed Roadway)
RL-14A	10-17-06	2	Guardrail Grading
TC-1	10-17-06	1	Work not Affecting Traffic
TC-81	10-17-06	1	Restricted Width Signing
TC-418	10-16-07	1	Lane Closure on Divided Highway
TC-423	10-16-07	1	Closure of Two Adjacent Lanes on Undivided Highway

DES. NO. 108
FILE NO. 30163

EP-1

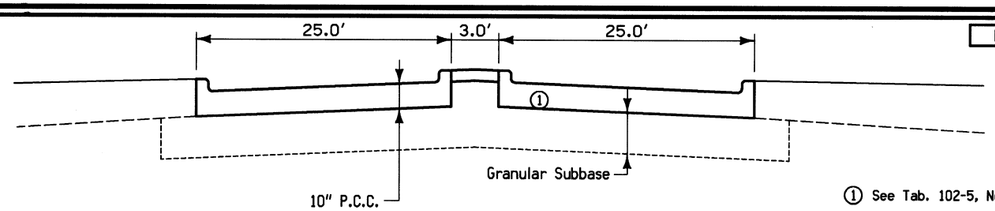

1 See Tab. 102-5, No. 1

BRIDGE APPROACH SECTIONS - IA 926
TYPICAL CROSS SECTION EXISTING HIGHWAY PAVEMENT

TABULATION OF EXISTING PAVEMENT

102-5
10-29-02

No.	Location	Existing Pavement (Type)	Coarse Aggregate TYPE Gravel	Coarse Aggregate TYPE Crushed Stone	Coarse Aggregate Source	Coarse Aggregate Durability Class	Pavement Thickness (Inches)	Reinforcement (Type)	Detail Typical
1	IA 926	P.C.C.					10		EP-1

STEEL BEAM GUARDRAIL AT BRIDGE END POST AND CONCRETE BARRIER

Refer to Standard Road Plans RE-48A, RE-64A, RE-64B, and RE-65B

108-8A
04-19-05

Location No.	Direction of Traffic (1)	End A=Approach T=Trailing	Side O = Outside M = Median	Station	Case	Standard Road Plan	STS (18.75') Lin. Ft.	VT1 Lin. Ft.	VF Lin. Ft.	VT2 Lin. Ft.	ET Terminal (37.5') Lin. Ft.	STS Thrie Beam (25.0') Lin. Ft.	STS Transition Section (6.25') Lin. Ft.	'W' Beam (2) (VT1) + (VF) + (VT2) + (ET) Lin. Ft.	Posts (3) 6"x 8"x 7' with 6"x 8" Spacer Blocks (6 or 7) No.	Posts (4) 6"x 8"x 6' with 6"x 8" Spacer Blocks No.	CRT Posts 6"x 8"x 6' with 6"x 8" Spacer Blocks (5) No.	Delineators and Object Markers Type	Delineator Single White D-1W No.	Object Marker Type 2 OM2-3YY No.	Object Marker Type 3 OM-3L No.	Object Marker Type 3 OM-3R No.	Bid Items Installation of Guardrail (STS)+(VT1)+(VF)+(VT2)+(ET) Lin. Ft.	Anchorage and Terminal Systems RE-69A No.	RE-69B No.	RE-69C No.	RE-76 No.	Remarks
2	EB	A	0	218+23	A	RE-64B	18.75		37.5		37.5	25.0	6.25	75	5	6	5	2		3		1	93.75		1		1	Planned post located on intake - omit post
4	WB	A	0	218+23	A	RE-64B	18.75		12.5	37.5	37.5	25.0	6.25	87.5	6	9	5	2		4		1	106.25		1		1	

(1) Lane(s) to which the obstacle is adjacent.
(2) Includes (1) special 12.5' section of 'W' Beam, see RE-76.
(3) (6) 6"x 8"x 7' posts required when RE-69C is specified.
(4) The last two posts of the RE-76 Terminal section are included as part of that bid item.

GRADING FOR GUARDRAIL INSTALLATIONS

Refer to Standard Road Plans RL-12, RL-14A(1), RL-14A(2), RL-14B, and Typical 4303

107-23
04-19-05

(1) Lane(s) to which the installation is adjacent.
A = Approach
T = Trailing

Location No.	Direction of Traffic (1)	Station	Side	Type	BY A	BY T	Z A	Z T	X1	Y1 (2)	X2	Y2	X3	Y3	X4	Y4	Class 10 Excavation Cu. Yds.	(3) Embankment In Place Cu. Yds.	Pipe Size Inches	Pipe Type	Pipe Length Lin. Ft.	Remarks
2	EB	211+46.1	A																			No grading required
4	WB	225.35.4	A	4	11		64		16.1	3	28.4	4.8	65.9	6	102.9	11		379				'Y' dist. from back of curb (Tapers)

(2) Dimension (Y1) is referenced to the guardrail installation line.
(3) The "Embankment In Place" quantity is an estimate of the material required to build the guardrail grading beyond the existing shoulders.

LONGITUDINAL GROOVING

100-28
04-18-06

LOCATION	TOTAL Sq. Yds.	REMARKS
West Approach	188	Eastbound
East Approach	163	Eastbound
Bridge	5983	
West Approach	196	Westbound
East Approach	166	Westbound

REMOVE or REMOVE & REINSTALL BEAM GUARDRAIL

110-7A
04-19-05

(1) Lane(s) to which the installation is adjacent.

Location No.	Direction of Traffic (1)	Station	Side	Steel Beam Guardrail Remove (Lin. Ft.)	Steel Beam Guardrail Remove & Reinstall (Lin. Ft.)	Posts Remove (No.)	Posts Remove & Reinstall (No.)	End Anchorage Remove (No.)	End Anchorage Remove & Reinstall (No.)	Type	Remarks
2	EB	218+23	R	125		22		1		RE-52	SW corner of bridge

REBUILDING OF INTAKES AND UTILITY ACCESSES

104-11
10-29-02

No.	Location Station	Type	Adjustment
1	224+69.28 R	RA-41	Rebuild top to first construction joint

BRIDGE APPROACH SECTION

Refer to the RK-Series Standard Road Plans.

112-6
04-19-05

* Not a bid item

Location Bridge Station	End	Approach Pavement (T) Thickness Inches	Pay Length Feet	Non-Reinf. Pavement Area Sq. Yds.	Single-Reinf. Pavement Area Sq. Yds.	Double-Reinf. Pavement Area Sq. Yds.	Fixed or Movable Abutment F or M	Subdrain * Perforated Subdrain 4" Lin. Ft.	* Subdrain Outlet Station	Side	* Porous Backfill Cu. Yds.	Class 'A' * Crushed Stone Backfill Cu. Yds.	* Modified Subbase Tons	* Polymer Grid Sq. Yds.	Remarks
218+23 WEST	1	12	78.0	86.3	60.9	86.5	M	100	212+13	L	2.1	0	165	262	Subdrain to N, then E
218+23 WEST	2	12	74.9	77.3	60.2	86.0	M	115	212+47	R	2.1	0	159	252	Subdrain to S, then E
218+23 EAST	3	12	64.0	82.8	49.2	60.7	F	46	224+82	R	2.2	0	136	216	Subdrain to South
218+23 EAST	4	12	64.0	82.8	50.1	62.8	F	31	224+82	R	2.2	0	138	219	Subdrain to South

6125
12-08-95

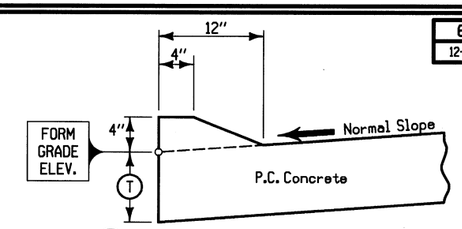

(T) is the thickness for pavement/shoulder

DETAILS OF INTEGRAL 4" SLOPED CURB

DES. NO. 108
FILE NO. 30160